Pro Builder
72 Linear GSB2

- Direct Vent Fireplace
- Natural Gas or Propane
- Vent Horizontally or Vertically
- Standard Residential
- Mobile Home Approved

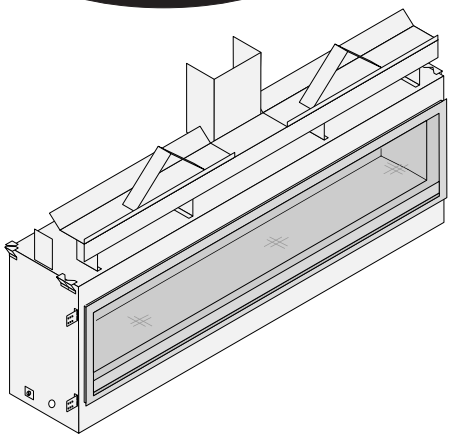

Listed by

IAPMO-R&T OCEANA Gas Mark

AS/NZS 5263.1.3 GMK10166

IAPMO-R&T OCEANA

WARNING: If the information in these instructions is not followed exactly, a fire or explosion may result causing property damage, personal injury or loss of life.

- **DO NOT PLACE ARTICLES ON OR AGAINST THIS APPLIANCE.**
- **DO NOT USE OR STORE FLAMMABLE MATERIALS NEAR THIS APPLIANCE.**
- **DO NOT SPRAY AEROSOLS IN THE VICINITY OF THIS APPLIANCE WHILE IT IS IN OPERATION.**
- **DO NOT MODIFY THIS APPLIANCE.**

- Do not store or use gasoline or other flammable vapors and liquids in the vicinity of this or any other appliance.

WHAT TO DO IF YOU SMELL GAS

- Do not try to light any appliance.
- Do not touch any electrical switch; do not use any phone in your building.
- Immediately call gas supplier from a neighbor's phone. Follow the gas supplier's instructions.
- If you cannot reach your gas supplier, call the fire department.

- Installation and service must be performed by a qualified installer, service agency or the gas supplier.

This appliance may be installed in an aftermarket permanently located, manufactured home (USA only) or mobile home, where not prohibited by local codes.

This appliance is only for use with the type(s) of gas indicated on the rating plate. A conversion kit is supplied with the appliance.

WARNING

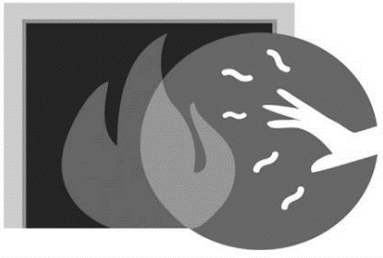

HOT GLASS WILL CAUSE BURNS.

DO NOT TOUCH GLASS UNTIL COOLED.

NEVER ALLOW CHILDREN TO TOUCH GLASS.

Installation Manual

Installer: **After installation give this manual to the home-owner and explain operation of this heater.**

© Copyright 2018, T.I. $10.00 100-01478 3/1/18

Dragon Wholesaling Pty. Ltd.
Unit 4, 16 Lexington Drive
Bella Vista NSW
Australia 2153

Overview

This manual details the installation requirements for the Pro Builder 72 Linear GSB2 fireplace. For operating and maintenance instructions, refer to the Pro Builder 72 Linear Owner's Manual.

Minimum Clearances to Combustibles

Fireplace To Adjacent Wall	0" (0mm)	Base Of Fireplace To Enclosure Top	68" (1728mm)
Wood Floor Beneath Fireplace	0" (0mm)	Sides To Enclosure	0.5" (13mm)
Back To Enclosure	0.5" (13mm)	Base Of Fireplace To A Mantel	See Owner's Manual

FAN TYPE VENTED CIRCULATOR
Blower Electrical Rating: 240V., 1.5 Amps, 50 Hz, 150 Watts

	L.P.	N.G.
Input Rate on "HI" (MJ/h)	43.8	43.8
Input Rate on "LO" (MJ/h)	22.3	32.1
Orifice Size - (DMS)	#55 (2)	#43 (2)

	L.P.	N.G.
Minimum Inlet Pressure (kPa)	2.74	1.13
Maximum Inlet Pressure (kPa)	3.23	1.74
Manifold Pressure on "HI" (kPa)	2.53	0.90

This appliance is equipped for installation 0-610 m. For altitudes above 600m, the vent configuration, orifice, or combination of both may need to be changed. See owner's manual for information on making these changes.

Manufactured by:

TRAVIS INDUSTRIES HOUSE OF FIRE
12521 Harbour Reach Dr.
Mukilteo, WA 98275

Certificate Holder:

Dragon Wholesaling Pty. Ltd.
Unit 4, 16 Lexington Drive
Bella Vista NSW 2153
Australia

MANUFACTURE DATE:

2018	☐ Jan.	☐ Apr.	☐ Jul.	☐ Oct.	
2019	☐ Feb.	☐ May	☐ Aug.	☐ Nov.	
2020	☐ Mar.	☐ Jun.	☐ Sep.	☐ Dec.	

ProBuilder 72 GSB2 (Au)
Vented Gas Fireplace Heater

IAPMO-R&T
OCEANA™
Gas Mark
GMK10166

Tested to the combustion performance and construction requirements of AS/NZS 5263.1.3 Gas Space Heating Appliances. This appliance must be installed in accordance with all local codes.

This ProBuilder 72 GSB2 appliance is equipped from the factory only for use with Natural Gas and is only for use with the type of gas indicated on the rating plate. For conversion to LP (Propane) use a certified kit supplied by the manufacturer. See owner's manual for information on making these changes.

This appliance may be installed in an aftermarket, permanently located, manufactured (mobile) home where not prohibited by local codes.

This vented gas fireplace heater is not for use with air filters. This appliance must be properly connected to a venting system in accordance with the manufacturer's installation instructions. Use only approved co-linear direct vent systems to vent this appliance to the exterior. See owner's manual for approved brands of venting.

WARNING: Improper installation, adjustment, alteration, service or maintenance can cause injury or property damage. Refer to the owner's information manual provided with this appliance. For assistance or additional information consult a qualified installer, service agency or the gas supplier.

This appliance is a Vented Gas Fireplace Heater. Not for use with Solid Fuel.

Young children should be carefully supervised at all times when they are in the same room as the appliance.

Table of Contents 3

Overview 2
Listing Details 2
Installation Options 6
Heating Specifications 6
Dimensions 6
Packing List 7
Additional Items Required 7
Recommended Installation Procedure 7
Fireplace Placement Requirements 8
Clearances 8
Raised Fireplaces 8
Televisions Placed Above the Fireplace 9
Using a Mantel Between the Fireplace and Television 9
Using a Buildout Above Fireplace and Television 10
Using a Buildout Below a Television 11
Minimum Framing Dimensions 12
Standoff Assembly 13
Nailing Brackets 14
Standard vs. Extended Position 15
Header and Pipe Shield Installation 16
Corner Installations 20
Removing the Front Panel 21
Gas Line Requirements 22
Fuel 22
Gas Line Connection 22
Gas Inlet Pressure 22
Gas Line Location 23
*Relocating the Gas Line to the Base of Fireplace 23
Electrical Connection 24
Optional Wall Switch or Thermostat Installation 25
Parallel Connection Series Connection 25
Vent Requirements 25
Vent Clearances 26
Vent Firestop or Thimble 26
Altitude Considerations 26
Approved Vent 26
Vent Installation 26
Approved Vent Configurations 27
Exhaust Restrictor Position 27
Diffuser 28
Minimum Vent Configuration 29
Vent Configuration: Vertical Termination 30
Vent Configuration: Horizontal Termination with Vertical Rise 31
Termination Requirements 32
Hearth Requirements 33
Facing Requirements 34
Standard vs. Extended Position 35
Facing Thicker than 1-1/2” (38mm) 36
Screen Assembly Mounts 37
Do Not Drill or Screw Zone 38
Mantel Requirements 39
Mantel Column Clearances 39
Use of a Non-Combustible Mantel Below Listed Mantel Clearances 40
Finalizing the Installation 41
Air Shutter Adjustment 42
Location of Controls 43
Glass Frame Removal and Installation 44
Crushed Glass Installation 47
LP Conversion Instructions 49
Wall Mount Remote Thermostat installation (optional) 54
Installation 54
Wiring Diagram – GSB2 58

4 Safety Precautions

Safety Warnings

- Failure to follow all of the requirements may result in property damage, bodily injury, or even death.

Young children should be carefully supervised when they are in the same room as the appliance. Toddlers, young children and others may be susceptible to accidental contact burns. A physical barrier is recommended if there are at risk individuals in the house. To restrict access to a fireplace or stove, install an adjustable safety gate to keep toddlers, young children and other at risk individuals out of the room and away from hot surfaces.

Children and adults should be alerted to the hazards of high surface temperature and should stay away to avoid burns or clothing ignition. Do not touch the hot surfaces of the heater. Educate all children of the danger of a high-temperature heater.

Due to the high temperature, the heater should be located out of traffic and away from furniture and draperies.

- This unit must be installed by a qualified installer to prevent the possibility of an explosion.
- This appliance must be installed in accordance with all local codes, if any; if not, in U.S.A. follow ANSI Z223.1 and NFPA 54(88), in Canada follow CSA B149.1.
- A manufactured home (USA only) or mobile home OEM installation must conform with the Manufactured Home Construction and Safety Standard, Title 24 CFR, Part 3280, or, when such a standard is not applicable, the Standard for Manufactured Home Installations, ANSI/NCSBCS A225.1, or Standard for Gas Equipped Recreational Vehicles and Mobile Housing, CSA Z240.4. This appliance may be installed in Manufactured Housing only after the home is site located.
- All exhaust gases must be vented outside the structure of the living-area. Combustion air is drawn from outside the living-area structure. The venting must not be connected to a chimney flue serving a separate solid-fuel burning appliance.
- Notify your insurance company before hooking up this fireplace.
- The instructions in this manual must be strictly adhered to. Do not use makeshift methods or compromise in the installation. Improper installation will void the warranty and safety listing.
- This heater is approved for use with natural gas (NG) or propane (LP). Burning the incorrect fuel will void the warranty and safety listing and may cause an extreme safety hazard. Direct questions about the type of fuel used to your dealer.
- Contact your local building officials to obtain a permit and information on any installation restrictions or inspection requirements in your area.
- If the flame becomes sooty, dark orange in color, or extremely tall, do not operate the heater. Call your dealer and arrange for proper servicing.
- It is imperative that control compartments, screens, or circulating air passageways of the heater be kept clean and free of obstructions. These areas provide the air necessary for safe operation.
- Do not operate the heater if it is not operating properly in any fashion or if you are uncertain. Call your dealer for a full explanation of your heater and what to expect.
- Do not store or use gasoline or other flammable liquids in the vicinity of this heater.
- Do not operate if any portion of the heater was submerged in water or if any corrosion occurs. Immediately call a qualified service technician to inspect the appliance and to replace any part of the control system and any gas control which has been under water.

Safety Warnings (continued)

- Because this heater can be controlled by a thermostat there is a possibility of the heater turning on and igniting any items placed on or near the appliance.
- Light the heater using the built-in igniter. Do not use matches or any other external device to light your heater.
- Never remove, replace, modify or substitute any part of the heater unless instructions are given in this manual. All other work must be done by a trained technician. Don't modify or replace orifices.
- The viewing glass should be opened only for conducting service (or lighting the pilot on millivolt units).
- Allow the heater to cool before carrying out any maintenance or cleaning.
- Operate the heater according to the instructions included in this manual.
- If the main burners do not start correctly turn the gas off and call your dealer for service.
- This unit is not for use with solid fuel.
- Do not place anything inside the firebox (except the optional artwork).
- **Warning:** Do not operate appliance with the glass front removed, cracked or broken. Replacement of the glass should be done by a licensed or qualified service person.
- Do not throw this manual away. This manual has important operating and maintenance instructions that you will need at a later time. Always follow the instructions in this manual.
- Instruct everyone in the house how to shut gas off to the appliance and at the gas main shutoff valve. The gas main shutoff valve is usually next to the gas meter or propane tank and requires a wrench to shut off.
- A barrier designed to reduce the risk of burns from the hot viewing glass is provided with this appliance and shall be installed for the protection of children and other at-risk individuals.
- If the barrier becomes damaged, the barrier shall be replaced with the manufacturer's barrier for this appliance.
- Clothing or other flammable material should not be placed on or near the appliance.
- Any safety screen, guard, or barrier removed for servicing an appliance must be replaced prior to operating the appliance.
- Installation and repair should be done by a qualified service person. The appliance should be inspected before use and at least annually by a professional service person. More frequent cleaning might be required due to excessive lint from carpeting, bedding material, et cetera. It is imperative that control compartments, burners, and circulating air passageways of the appliance be kept clean.
- **Travis Industries, Inc. grants no warranty, implied or stated, for the installation or maintenance of your heater, and assumes no responsibility of any consequential damage(s).**

SAFETY WARNINGS:

- **DO NOT PLACE ARTICLES ON OR AGAINST THIS APPLIANCE.**
- **DO NOT USE OR STORE FLAMMABLE MATERIALS NEAR THIS APPLIANCE.**
- **DO NOT SPRAY AEROSOLS IN THE VICINITY OF THIS APPLIANCE WHILE IT IS IN OPERATION.**
- **DO NOT MODIFY THIS APPLIANCE.**
- **THIS INSTALLATION MUST CONFORM WITH THE FOLLOWING:**
  - Manufacturer's Installation instructions
  - Local Gas Fitting Regulations
  - Municipal Building Codes,
  - Refer to AS/NZS 5601.1 for Gas Installations.
  - S.A.A. Wiring Code
  - Local Electrical Regulations
  - Any other statutory regulations
- **NOT SUITABLE FOR MARINE USE.**
- **NOT INTENDED FOR FIREPLACE INSERT.**
- **APPLIANCES INCORPORATING A LIVE FUEL EFFECT, AND DESIGNED TO OPERATE WITH LUMINOUS FLAMES, MAY EXHIBIT SLIGHT CARBON DEPOSITION.**

6 Features and Specifications

Installation Options

- Residential or Mobile Home
- Straight or Corner Placement
- Raised or Floor Placement
- Internal or External Chase
- Bedroom Approved

Heating Specifications

	Natural Gas	Propane
Approximate Heating Capacity (in square meters)*	Up to 209	Up to 209
Maximum Input Per Hour (MJ/H)	43.8	43.8

* Heating capacity will vary with floor plan, insulation, and outside temperature.

Dimensions

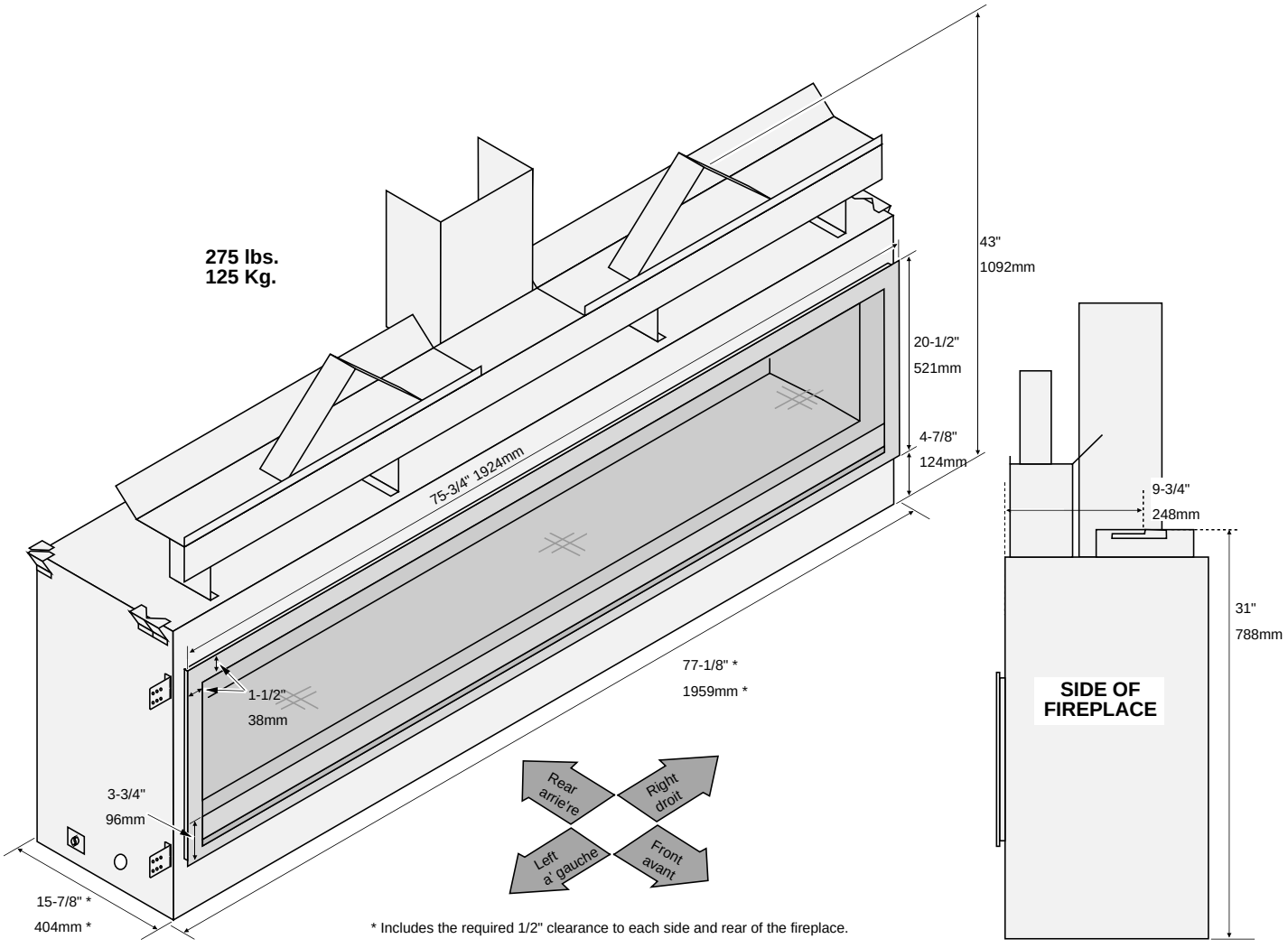

* Includes the required 1/2" clearance to each side and rear of the fireplace.

Packing List

- LP (Propane) Conversion Kit - Burner Orifices (2)-(#54), Pilot Orifice (0.14 LP), LP Regulator
- Thimble (2-Piece Assembly)
- Pipe Shield, Header Shield (shipped attached to top of fireplace)

Additional Items Required

- Gas Line Equipment (shutoff valve, pipe, etc.)
- Electrical Equipment (min. 14 gauge, grounded line)
- **This Fireplace Requires 7-1/2 lbs. (3.4 Kg) of 1/4" Crushed Glass**

  94500580 Platinum (10 lbs./4.55Kg)

  94500581 Bronze (10 lbs./4.55Kg)

  94500582 Cobalt (10 lbs./4.55Kg)

  94500583 Black (10 lbs./4.55Kg)

Recommended Installation Procedure

- Frame the opening for the fireplace. Make sure to allow for vent installation.
- Install the vent, gas line and electrical hook-up.
- Install the drywall.
- Install the hearth (if applicable).
- Install the facing (if applicable).
- Install the mantel (if applicable).
- Finalize the installation (see page 39).

8 Installation (for qualified installers only)

Fireplace Placement Requirements

- Fireplace must be installed on a level surface capable of supporting the fireplace and vent
- Fireplace must be placed directly on wood or non-combustible surface (not on linoleum or carpet)
- Fireplace should be located out of traffic and away from furniture and avoid burns.
- Fireplace must be placed so the gaps below and above the glass frame do not become blocked.
- Fireplace may be placed in a bedroom. Please be aware of the large amount of heat this appliance produces when determining a location.

Clearances

(a) Clearance to Side of Fireplace 1/2" (13mm). Do not place insulation in this space.
NOTE: Drywall (or other combustible) may contact the first ½" of the sides of the fireplace.

(b) Clearance to Back of Fireplace 1/2" (13mm). Do not place insulation in this space.

(c) When installed, walls in front of the fireplace must be a minimum 0" (0mm) to the side of the fireplace standoffs.

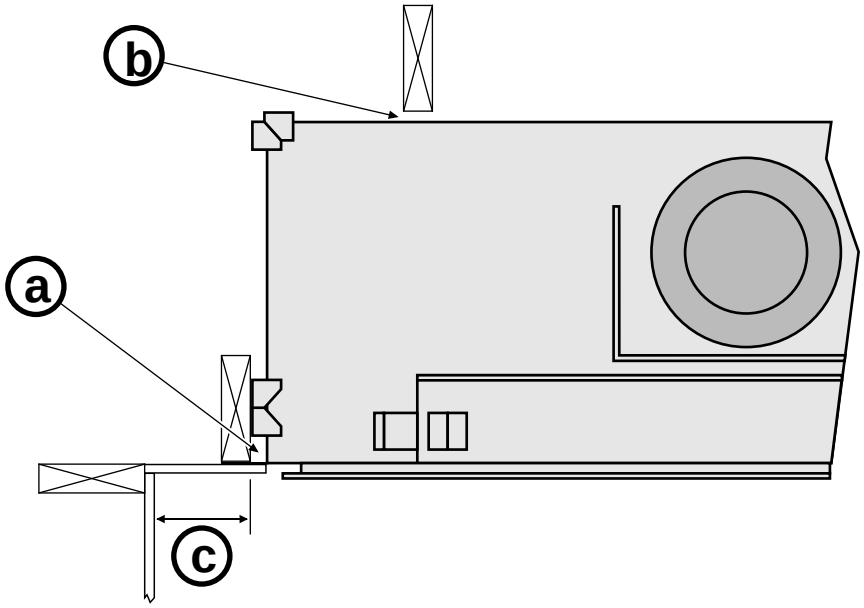

Raised Fireplaces

- The fireplace (and hearth, if desired) may be placed on a platform designed to support the fireplace and vent.
- The base of the fireplace must be a minimum 60" (1524mm) below the room ceiling.

The top of the control door (firebox opening) is approximately 8-3/4" (223mm) above the base of the fireplace. For a typical raised fireplace of 36" (915mm), place the fireplace on a platform 27.25" (693mm) tall.

Televisions Placed Above the Fireplace

The following section details three methods to allow for television installation above the fireplace.

Using a Mantel Between the Fireplace and Television

IMPORTANT NOTE REGARDING TELEVISIONS AND THIS FIREPLACE

Most television manufacturers instruct the homeowner to not place the television above a heat source. Doing so may negatively affect the longevity of the television and may negate the warranty. If you do place a television above the fireplace, please be aware of the large amount of heat generated by the fireplace and consider placing the television above a mantel to reduce the amount of heat that reaches the television. The homeowner must understand that Travis Industries does not take responsibility for any negative impact to televisions placed near this fireplace.

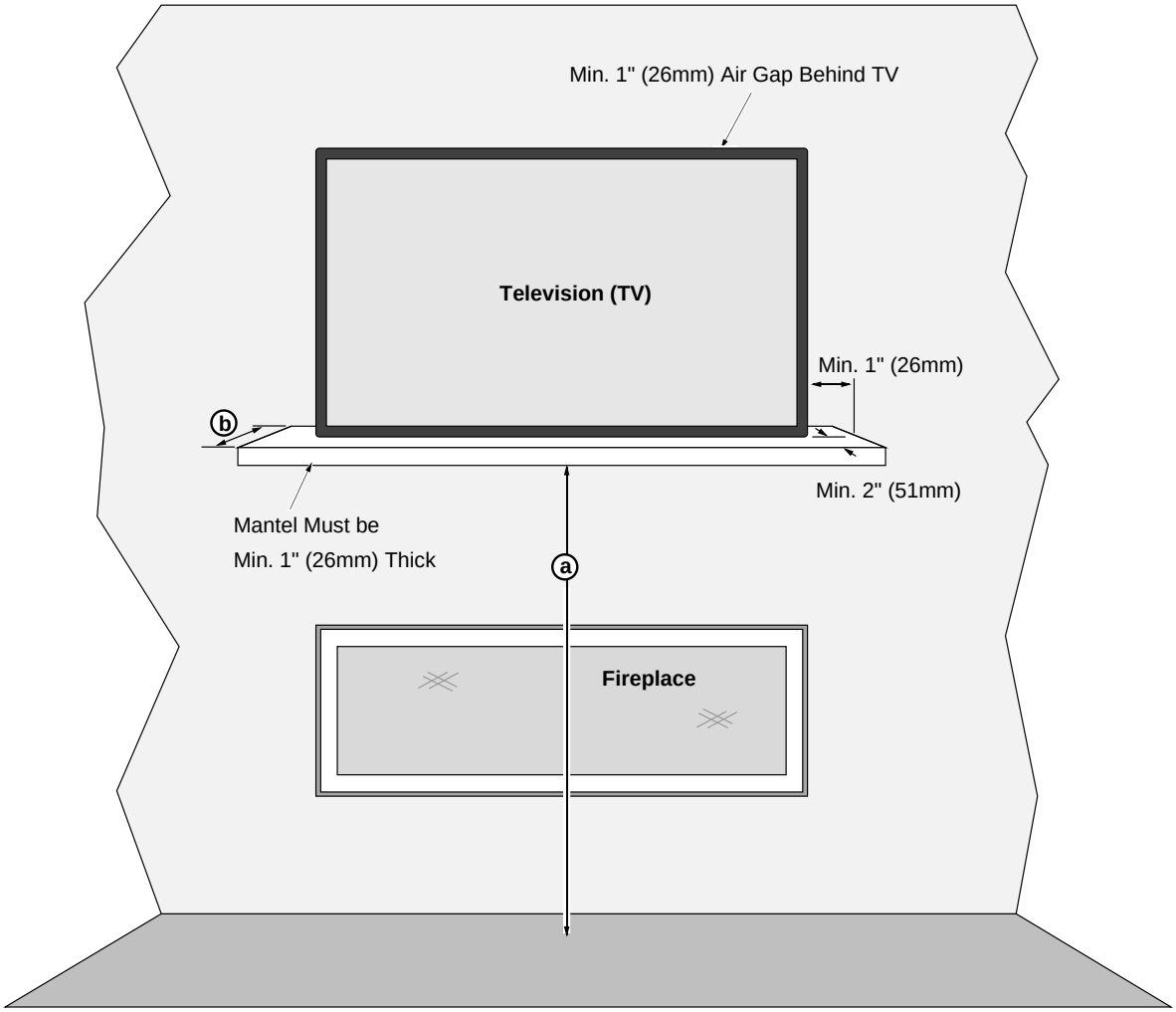

Minimum Dimensions:

(a) Minimum Mantel Height above Base of Fireplace*	41-1/2" (1054mm) with 8" (203mm) mantel depth
(b) Minimum Mantel Depth*	8" (203mm)*

*** Mantel depth is 8" (203mm) minimum to allow heat to travel forward and dissipate. If using more than an 8" (203mm) mantel, make sure to make the mantel height (a) higher (see mantel requirements on page 39 for details).**

NOTE: The mantel must extend 2"(51mm) in front of the TV and 1"(26mm) to both sides. If you have a TV that is greater than 6"(152mm) deep (including the 1"(26mm) gap behind), you will need to alter the mantel depth and height.

WIRING NOTE: If running wiring into the enclosure, use thermal insulating wrap around the wiring. Secure the wiring to +protect from contact with hot surfaces.

Using a Buildout Above Fireplace and Television

IMPORTANT NOTE REGARDING TELEVISIONS AND THIS FIREPLACE

Most television manufacturers instruct the homeowner to not place the television above a heat source. Doing so may negatively affect the longevity of the television and may negate the warranty. If you do place a television above the fireplace, please be aware of the large amount of heat generated by the fireplace and consider placing the television above a mantel to reduce the amount of heat that reaches the television. The homeowner must understand that Travis Industries does not take responsibility for any negative impact to televisions placed near this fireplace.

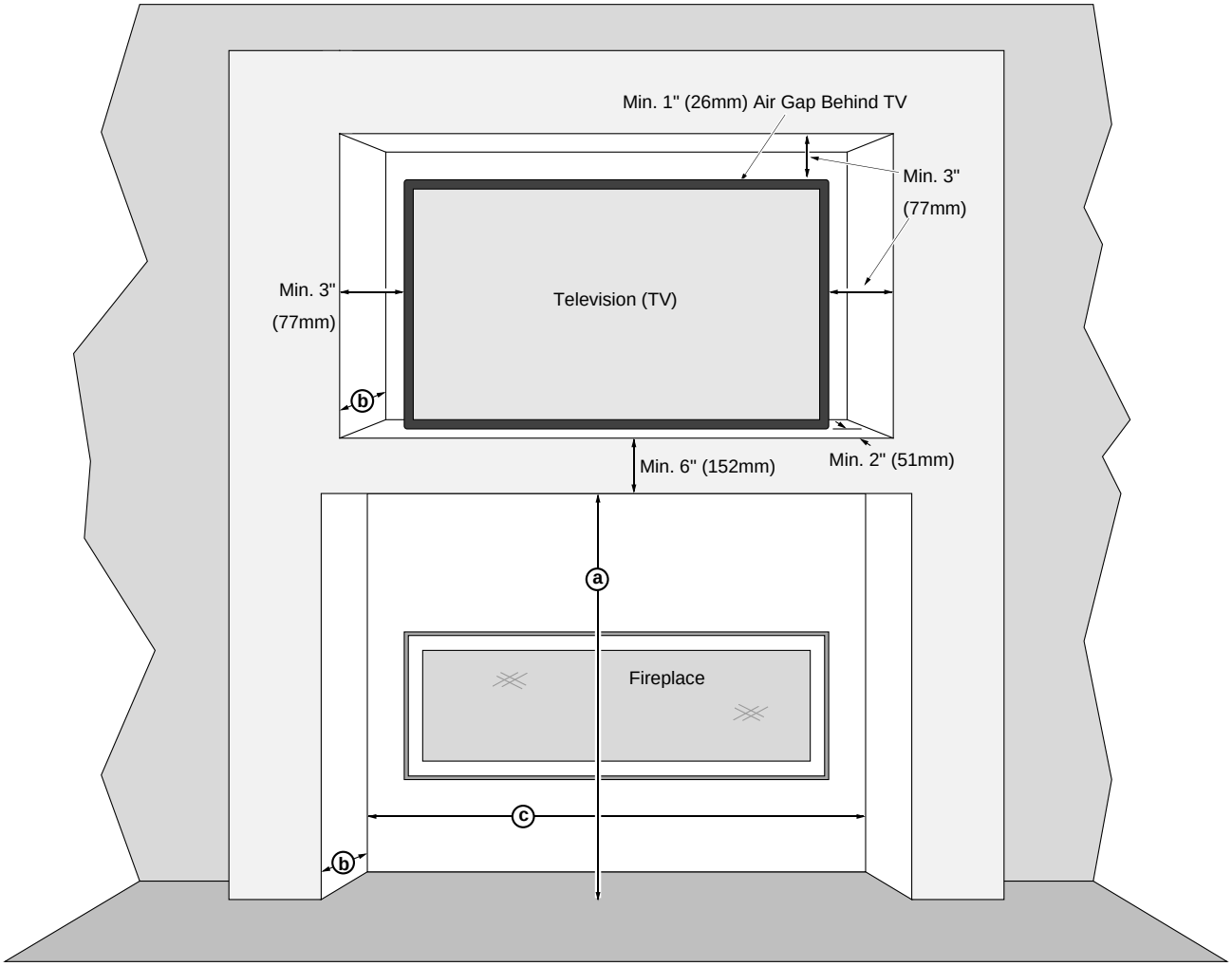

Minimum Dimensions:

(a) Minimum Buildout Height above Base of Fireplace*	41-1/2” (1067mm) with 8” (203mm) buildout depth
(b) Minimum Fireplace/TV Buildout Depth*	8” (203mm)*
(c) Minimum Fireplace Buildout Width	77-1/8” (1959mm)

* **Buildout depth is 8”(203mm) minimum to allow heat to travel forward and dissipate. If using more than an 8” (203mm) buildout, make sure to make the buildout height (a) higher (buildout must meet mantel requirements - see page 39 for details)**.

NOTE: The buildout must extend 2”(51mm) in front of the TV and 3”(77mm) to both sides and top. If you have a TV that is greater than 6”(152mm) deep (including the 1”(26mm) gap behind), you will need to alter the buildout depth and height.

WIRING NOTE: If running wiring into the enclosure, use thermal insulating wrap around the wiring. Secure the wiring to protect from contact with hot surfaces.

Using a Buildout Below a Television

IMPORTANT NOTE REGARDING TELEVISIONS AND THIS FIREPLACE

Most television manufacturers instruct the homeowner to not place the television above a heat source. Doing so may negatively affect the longevity of the television and may negate the warranty. If you do place a television above the fireplace, please be aware of the large amount of heat generated by the fireplace and consider placing the television above a mantel to reduce the amount of heat that reaches the television. The homeowner must understand that Travis Industries does not take responsibility for any negative impact to televisions placed near this fireplace.

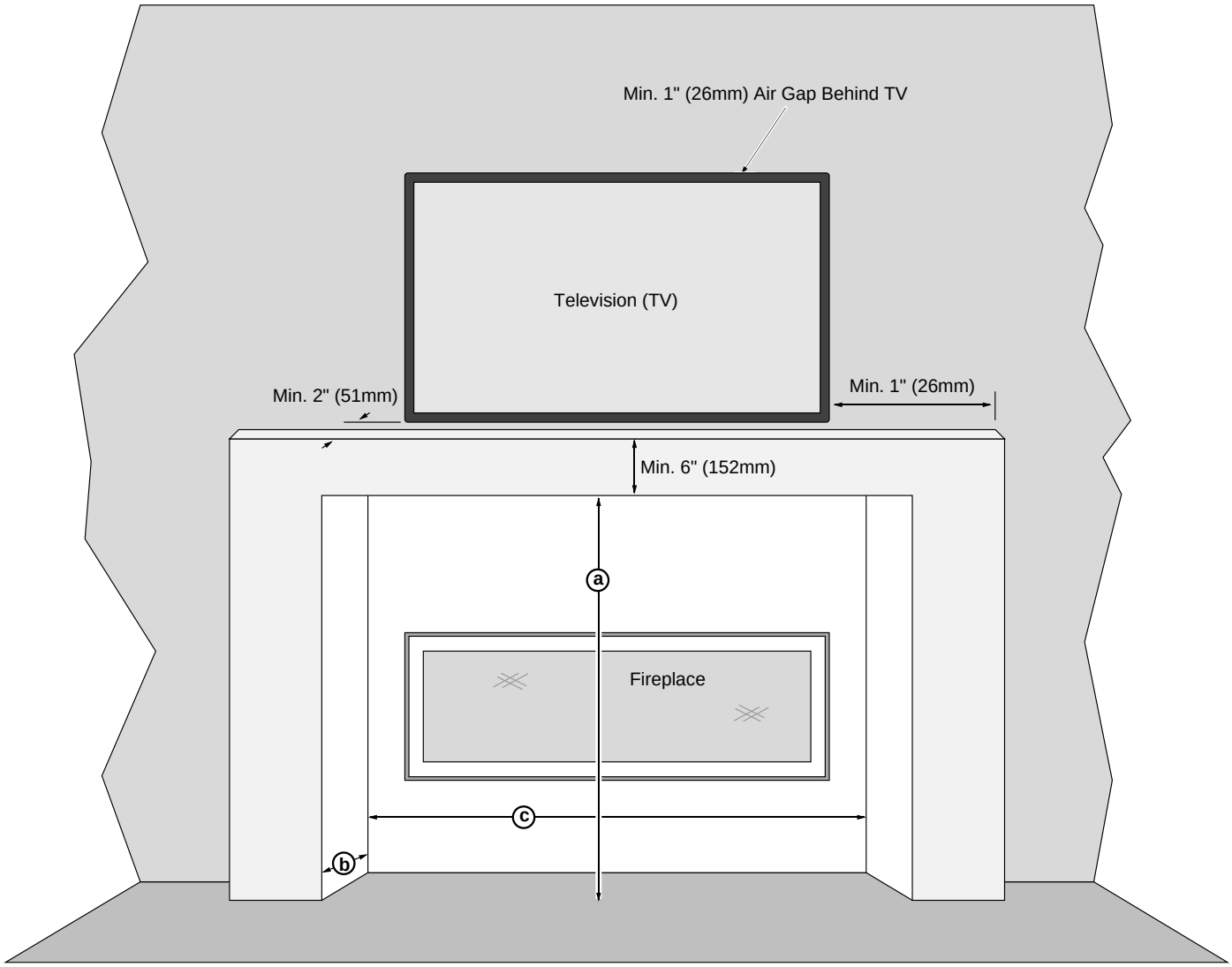

Minimum Dimensions:

(a) Minimum Buildout Height above Base of Fireplace*	41-1/2” (1067mm) with 8” (203mm) buildout depth
(b) Minimum Buildout Depth*	8” (203mm)*
(c) Minimum Fireplace Buildout Width	77-1/8” (1959mm)

* **Buildout depth is 8”(203mm) minimum to allow heat to travel forward and dissipate. If using more than an 8” (203mm) buildout, make sure to make the buildout height (a) higher (buildout must meet mantel requirements - see page 39 for details)**.

NOTE: The buildout must extend 2”(51mm) in front of the TV and 3”(77mm) to both sides and top. If you have a TV that is greater than 6”(152mm) deep (including the 1”(26mm) gap behind), you will need to alter the buildout depth and height.

WIRING NOTE: If running wiring into the enclosure, use thermal insulating wrap around the wiring. Secure the wiring to protect from contact with hot surfaces.

Minimum Framing Dimensions

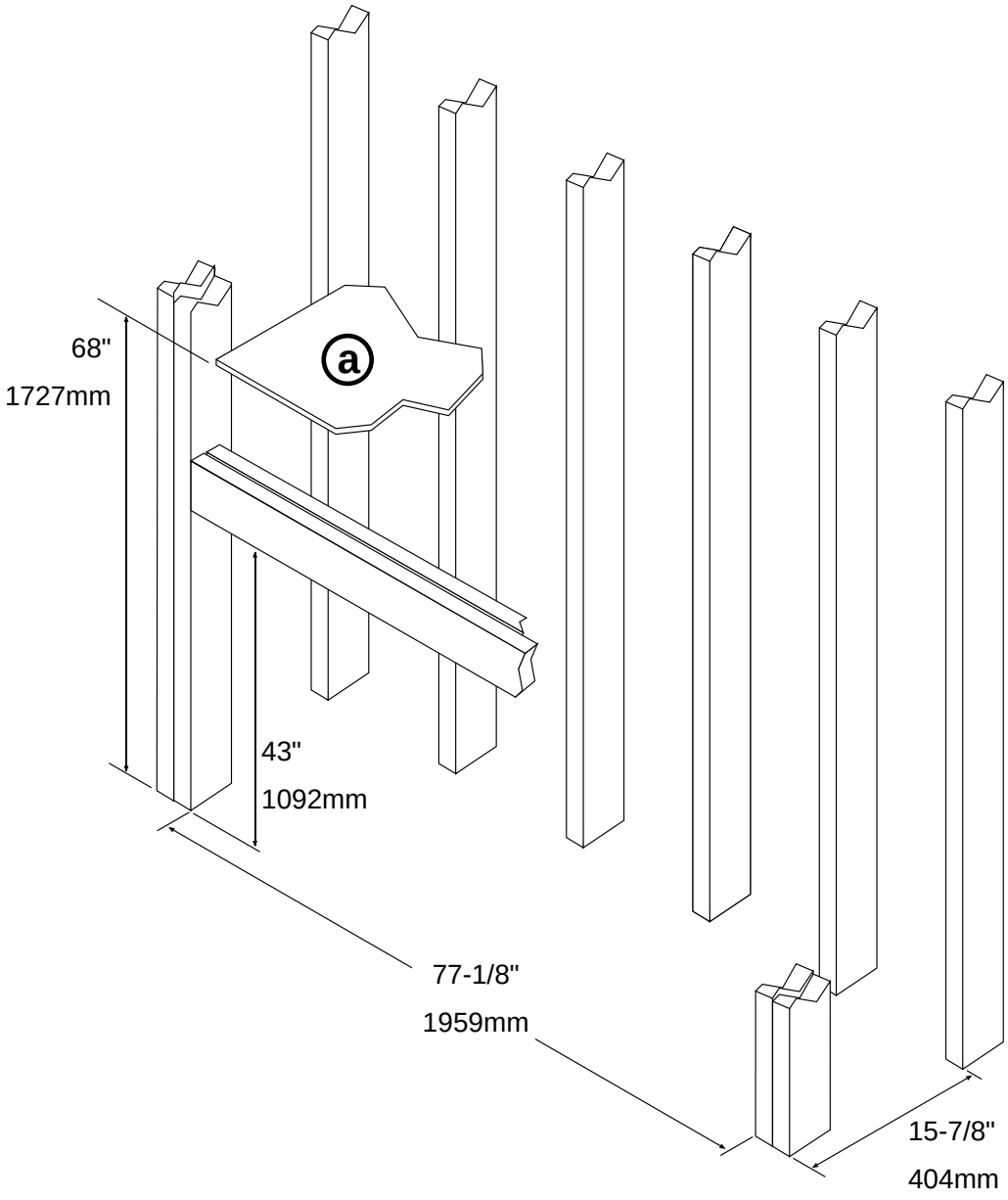

ⓐ The fireplace enclosure must be a minimum 68” (1727mm) tall. Do not build into the fireplace enclosure.

Standoff Assembly

- The side and rear standoffs must be assembled prior to placing the fireplace into position.
- These standoffs, when properly constructed, provide a guide for the required 1/2" clearance.

NOTE: The rear standoffs are bent around the rear corners of the fireplace as shown below to the right.

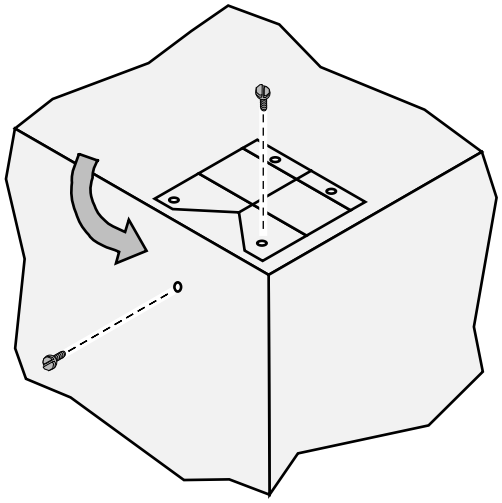

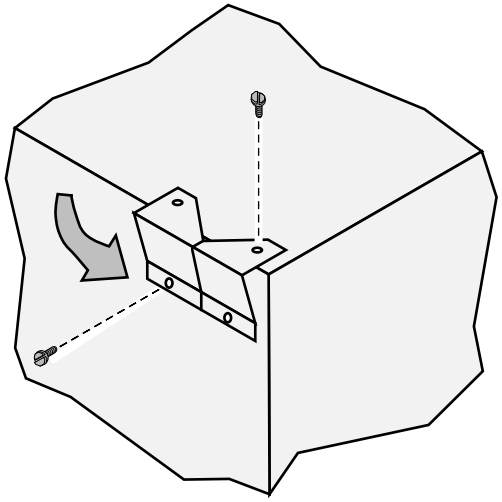

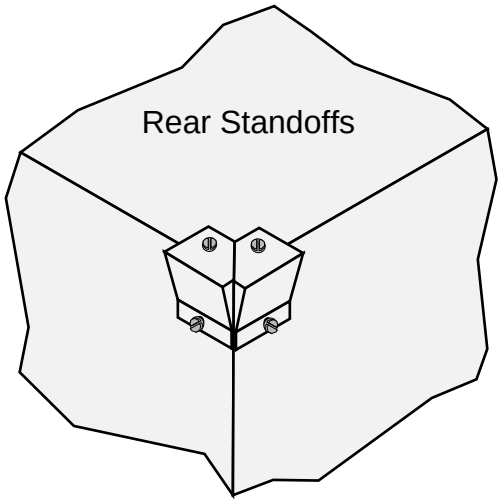

Nailing Brackets

The fireplace has nailing brackets on both sides. Secure the fireplace to the framing with the nailing brackets.

NOTE: Make sure the fireplace is square and plumb when placed in the framing. Measured corner-to-corner the fireplace should be square. Use shims to insure the fireplace is square.

NOTE: The nailing brackets have two positions: standard and extended. See the section "Facing Requirements" for details on which position is best for your installation.

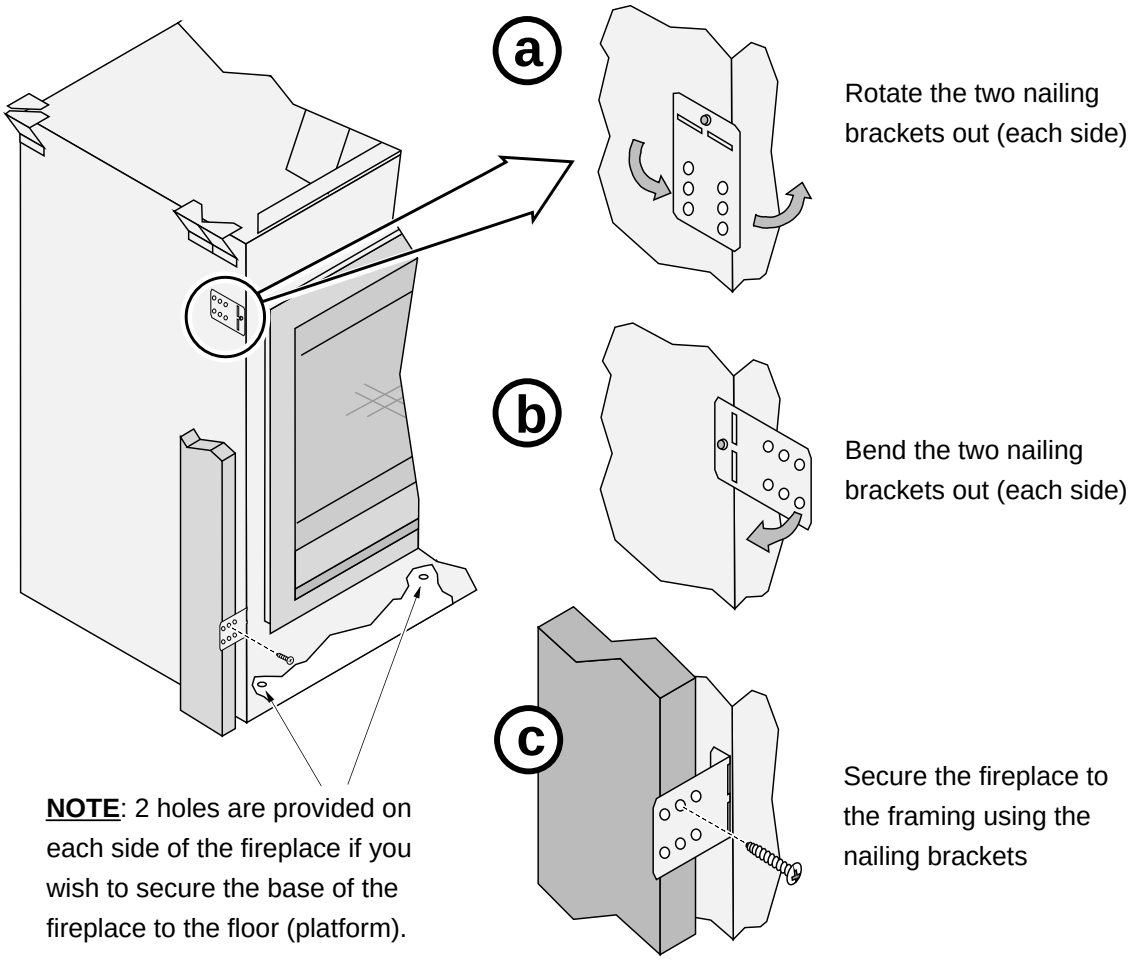

Rotate the two nailing brackets out (each side)

Bend the two nailing brackets out (each side)

Secure the fireplace to the framing using the nailing brackets

NOTE: 2 holes are provided on each side of the fireplace if you wish to secure the base of the fireplace to the floor (platform).

Standard Position
(nailing brackets as shown below)

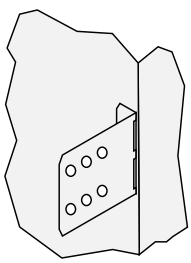

Extended Position
(rotate nailing brackets as shown below)

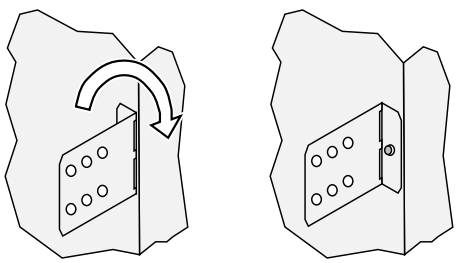

Standard vs. Extended Position

There are two positions that the standoff/heat shield assembly can be installed. The standoffs are shipped in the standard (forward) position.

- If the unit is installed in the standard position no modification is needed.
- If the unit is being installed in the extended position, the standoff/heat shield assembly must be repositioned back ½" (see illustration below).
  NOTE: see pages 14 & 35.for additional details about standard vs. extended installations.

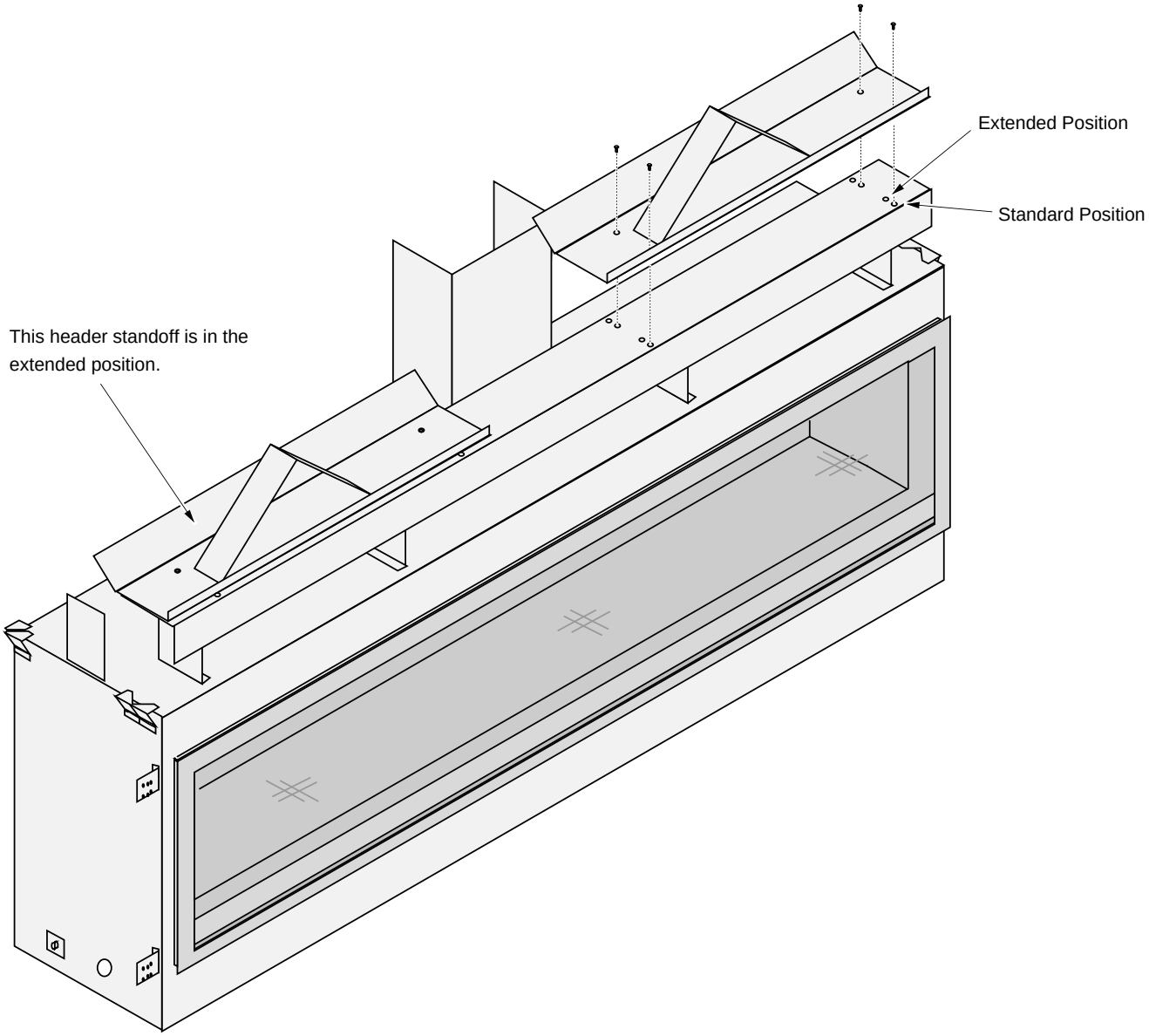

Header and Pipe Shield Installation

The header and pipe shield **must be installed as shown below**.

NOTE: The header and pipe shields may be installed after the fireplace is in place and vent attached (this allows for the fireplace to fit into the framing underneath the header and for the vent to be installed more easily).

1 Remove the pipe shield from its shipping location by removing the (4) - ¼" screws attaching it to the back of the fireplace (Keep the screws for reinstallation).

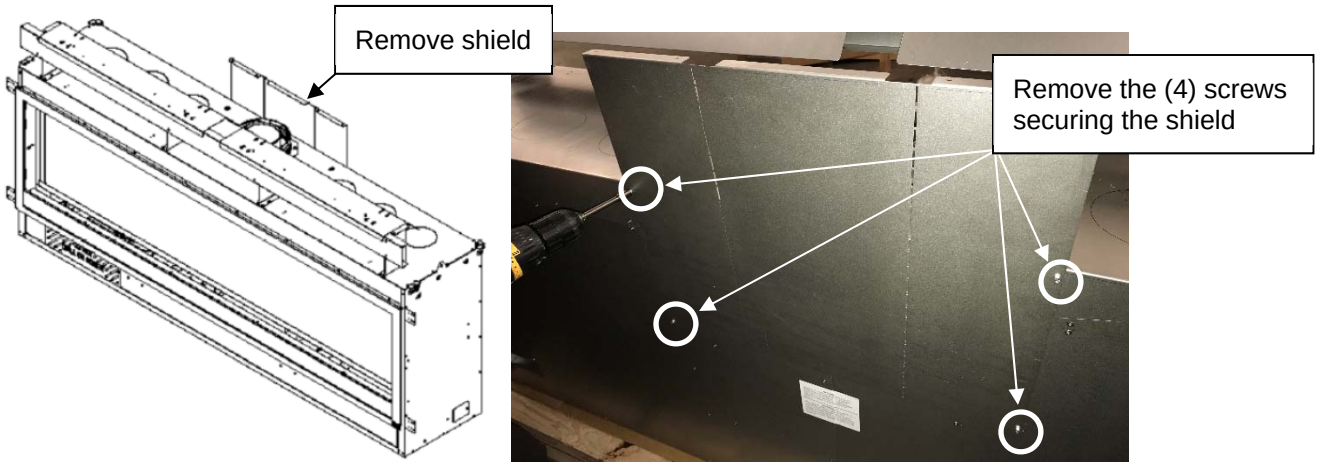

2 At each of the perforations, bend the sides of the pipe shield backwards 90° as shown below.

NOTE: The bottom flanges should be facing outward

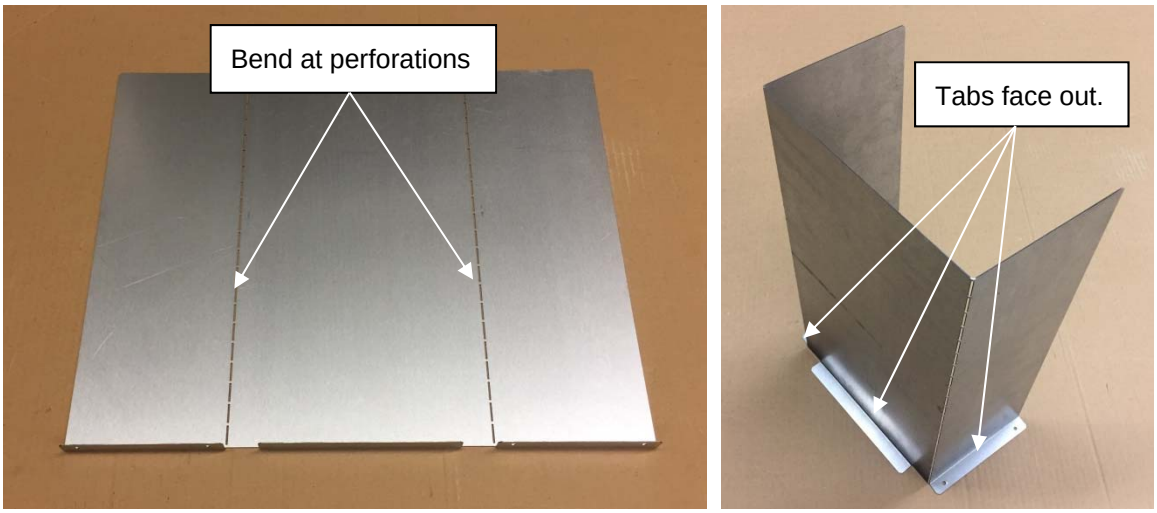

3 Line up the holes on the pipe shield tabs with the holes on the top of the fireplace. Use the screws that secured the shield during shipping to attach the pipe shield to the top of the fireplace.

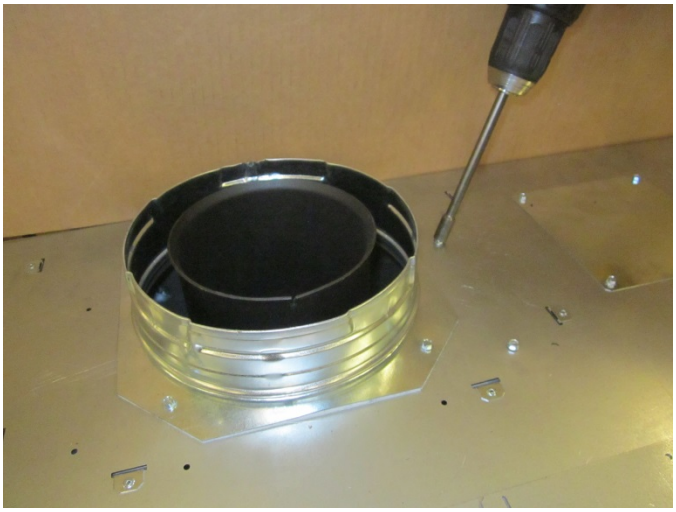

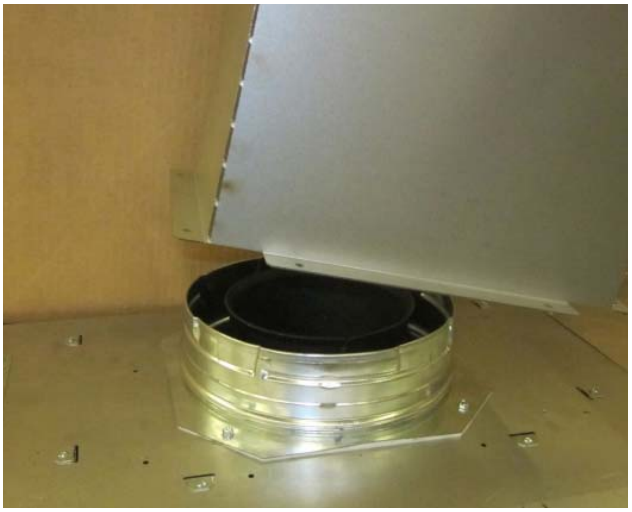

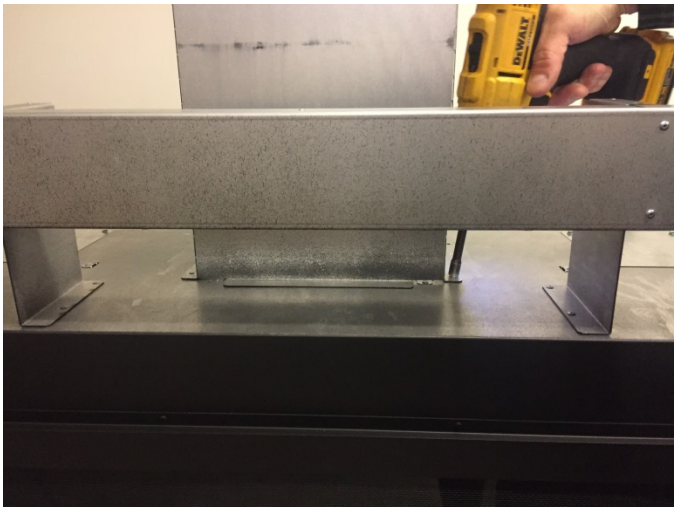

4 Remove the (4) screws from each of the (2) header shields (keep the screws for reinstallation). Turn each of the shields over endwise and secure them back into place using the screws you just removed. The bent edge of the shields should be facing upward and toward the back of the fireplace (see illustration below).

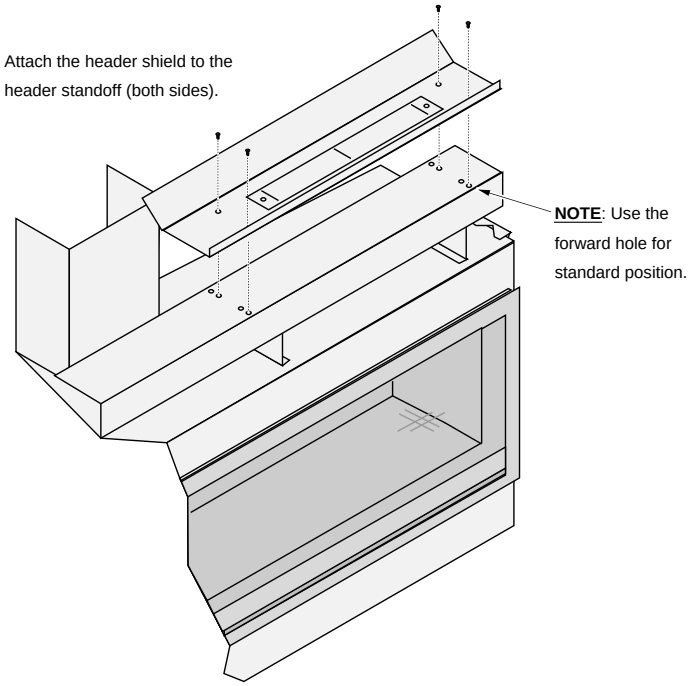

5 The (2) header standoffs are screwed down flat to front edge of the top of the shields. On each standoff, remove the screw that is closest to the outside edge of the fireplace (keep screw for reinstallation). Bend the legs at the perforations as shown below and attach the foot of the standoff to the top of the fireplace using the screw removed earlier in this step.

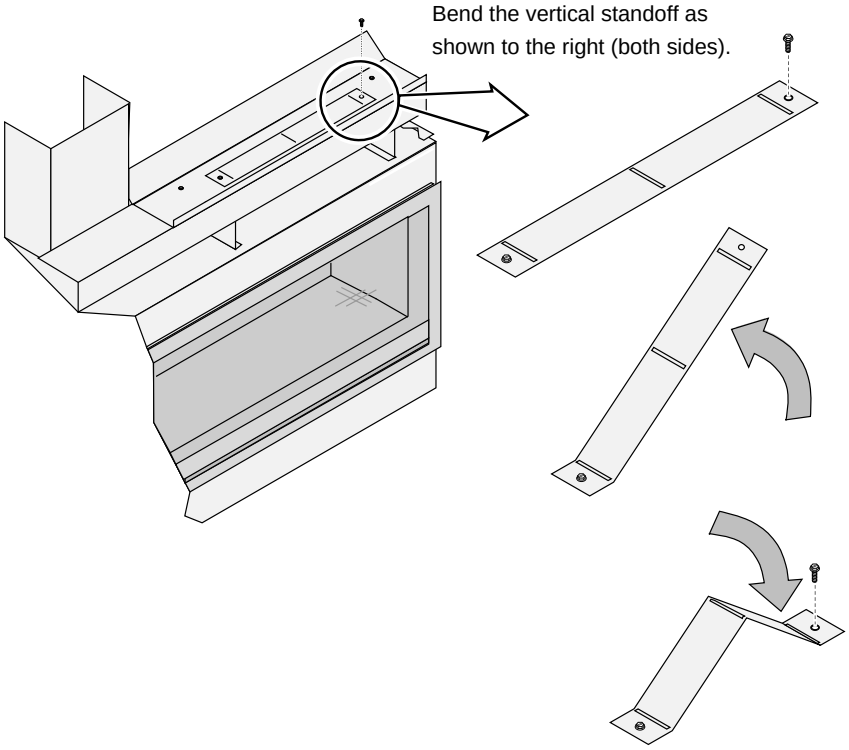

6 When finished the fireplace should be configured like the picture below.

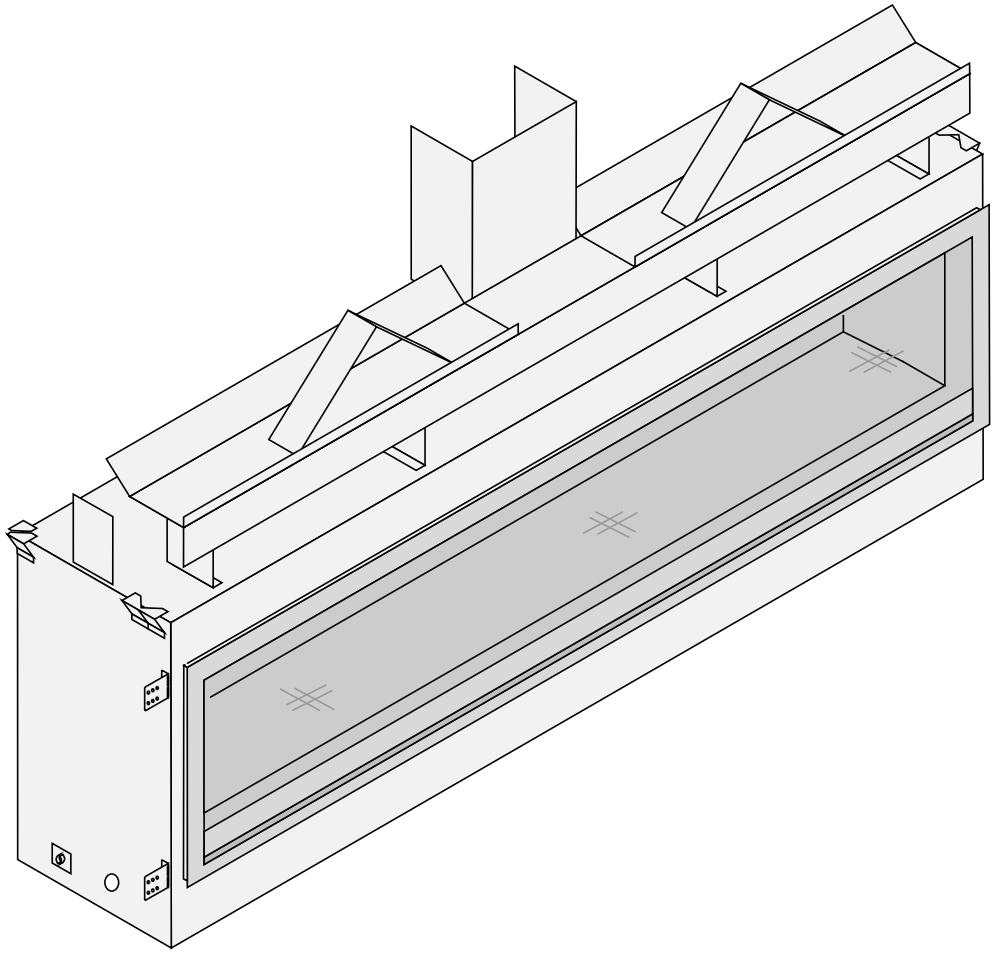

Corner Installations

A typical 45° installation uses the framing dimensions shown in the illustration below (NOTE: all clearances still apply).

(a) Corner to Wall (minimum)	76-7/16” (1942mm)
(b) Corner to Center of Flue (typical)	31-1/4” (794mm)

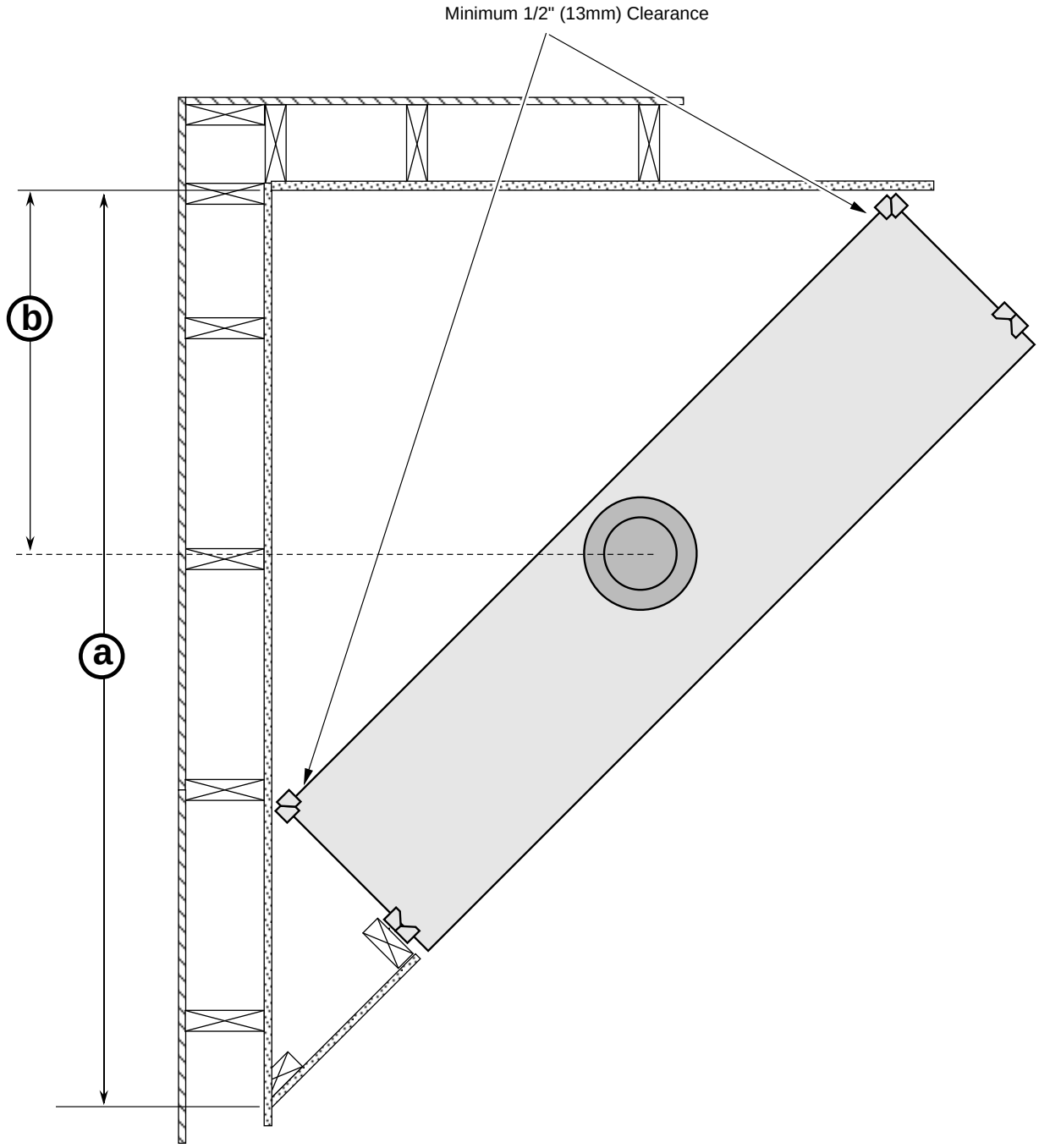

Removing the Front Panel

The front cover may be removed to access the components. This is required when relocating the electrical or gas inlet location. To remove the front cover

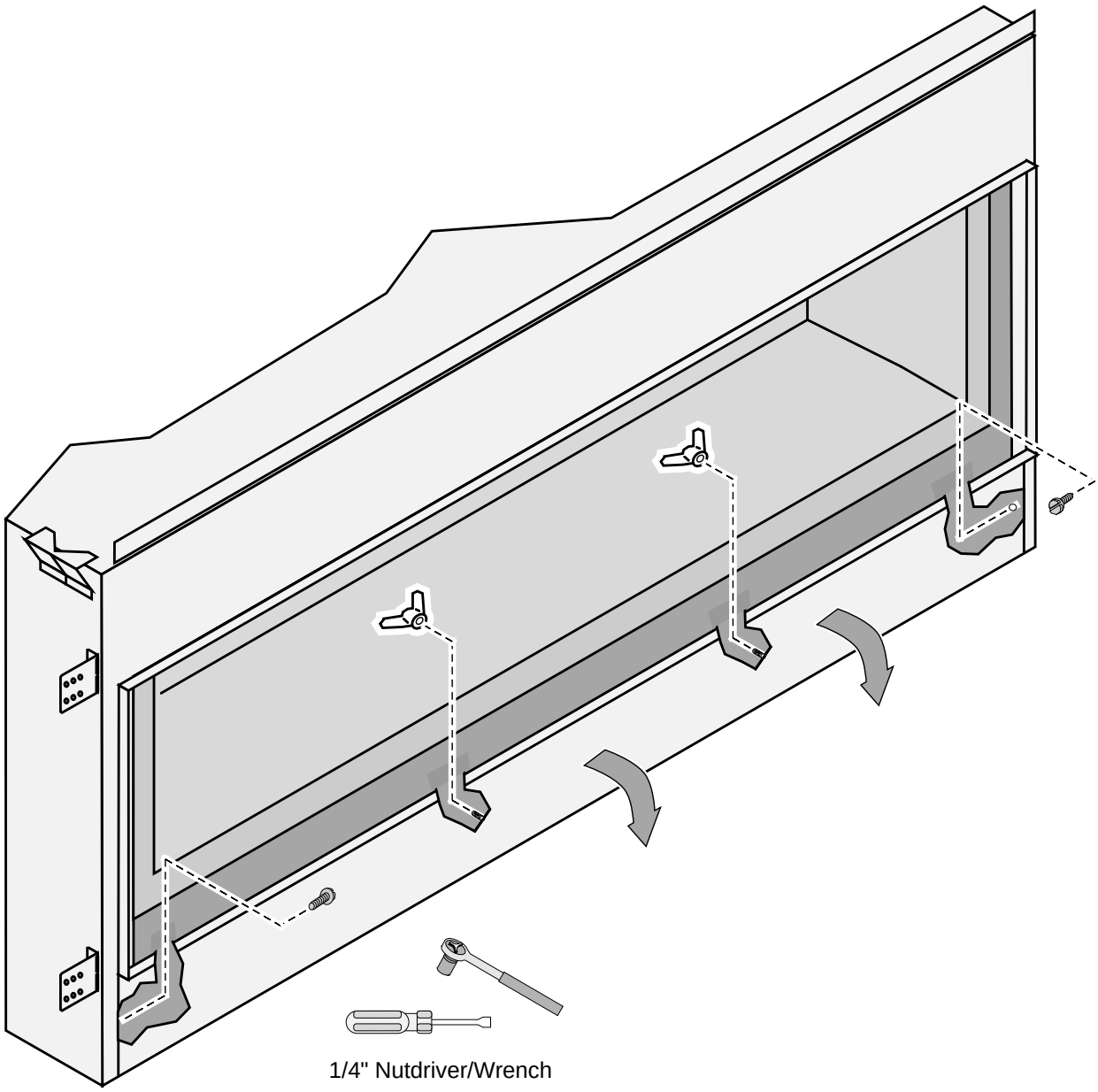

1/4" Nutdriver/Wrench

(a) Remove the center wingnuts.

(b) Loosen the two outer screws.

(c) Rotate the front panel down.

(d) Remove the front cover.

Gas Line Requirements

- The gas line must be installed in accordance with all local codes and the requirements listed below. In the absence of local codes, follow ANSI 223.1 in US/Canada or AS/NZS 5601.1 in Australia.
- The fireplace and gas control valve must be disconnected from the gas supply piping during any pressure testing of that system at test pressures in excess of 1/2 psig (3.5 kPA). For pressures under 1/2 psig (3.5 kPA), isolate the gas supply piping by closing the manual shutoff valve.
- Leak test all gas line joints and the gas control valve prior to and after starting the fireplace.
- This unit has been listed using the included internal gas shutoff valve.

Fuel

- This fireplace is designed either for natural gas or for propane (but not for both).

Gas Line Connection

- Installation must be performed by a qualified installer, service agency or the gas supplier (In Massachusetts a licensed plumber/gasfitter).

Gas Inlet Pressure

Gas Pressure	Max. Input Pressure	Min. Input Pressure	Max. Manifold Pressure	Min. Manifold Pressure
Natural Gas	7" W.C. (1.74 kPA)	5.5" W.C. (1.13 kPA)	3.8" W.C. (0.95 kPA)	1.1" W.C. (0.27 kPA)
Propane	13" W.C. (3.23 kPA)	11" W.C. (2.74 kPA)	11" W.C. (2.74 kPA)	2.9" W.C. (0.72 kPA)

- If the pressure is not sufficient, make sure the piping used is large enough, the supply regulator is adequately adjusted, and the total gas load for the residence does not exceed the amount supplied.
- The supply regulator (the regulator that attaches directly to the residence inlet or to the propane tank) should supply gas at the suggested input pressure listed above. Contact the local gas supplier if the regulator is at an improper pressure.

Directions for Connecting a Gas Pressure Test Gauge

The gas control valve (shown to the right) has two test ports for testing input (line pressure) and output (manifold) pressure. Loosen the brass screw on either test port and place a 5/16" i.d. rubber or plastic tube over the tapered test port. Connect the tube to the test gauge.

WARNING: The brass screw must be tightened after testing to prevent gas leakage.

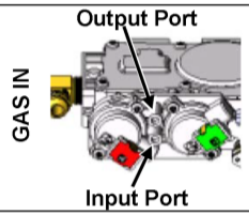

Gas Line Location

NOTE FOR RIGID PIPE: When using rigid pipe, you may wish to disconnect the shutoff valve from the fireplace and route the pipe through the fireplace wall. First, disconnect the gas line from the shutoff valve. Disconnect the shutoff valve from the cover plate (4 screws outside fireplace). The pipe may be routed through the cover plate and the shutoff valve and gas line may be re-attached inside the fireplace.

Gas line may be plumbed from the left side (stock) or below. See illustration and table below to determine gas line location.

	a	b
Stock Shutoff Valve Location (Left side)	6-1/4" (159mm)	2-3/8" (61mm)
Alternative Shutoff Valve Location (through base of fireplace)* **NOTE: You will need to add a longer 3/8" Flex Gas Line**	10-1/8" (258mm)	25-3/8" (645mm) (from each side)

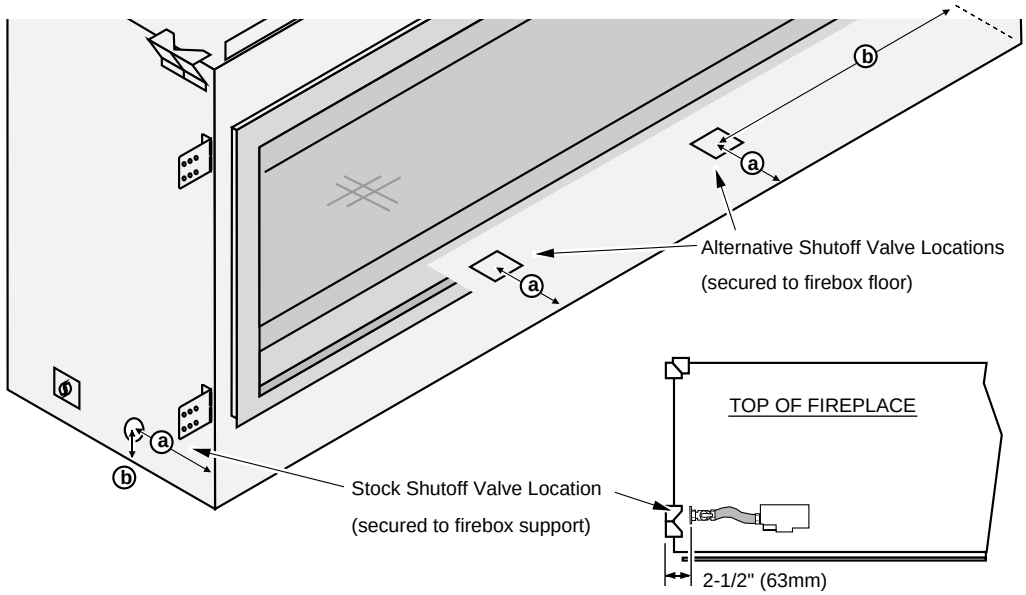

***Relocating the Gas Line to the Base of Fireplace**

1. Disconnect the gas line from the shutoff valve (3/4" wrench). Gas line is located inside the fireplace on the left side.

2. Remove the screw that holds the shutoff valve plate in place (1/4" nutdriver). Remove the shutoff valve plate.

3. Remove the cover plate from the bottom of the fireplace (it is held in place in the same fashion as the shutoff valve plate). Attach it to the left side of the fireplace.
4. Attach the shutoff valve plate to the bottom of the fireplace. Route the gas line to the bottom and re-attach the gas line to the shutoff valve. Make sure to leak test the entire gas line.

Electrical Connection

- The electrical line to the grounded receptacle inside the fireplace must be installed by a qualified installer and must meet all local codes.
- Make sure the household breaker is shut off prior to working on any electrical lines.
- The appliance, when installed, must be electrically grounded in accordance with local codes or, in the absence of local codes, with the National Electrical Code, ANSI/NFPA 70, or the Canadian Electrical Code, CSA C22.1.
- The electrical line must be a min. 14 gauge, and supply 120 Volts, 60 Hz, and 5.7 Amps.
- Route the electrical connection through the junction box cover plate and attach to the hookup wires pictured below.

Caution: Label all wires prior to disconnection when servicing controls. Wiring errors can cause improper and dangerous operation.

Do not connect 110-120 VAC to the gas control valve or wiring system of this fireplace.

	a	b
Left Side Electrical Junction Box Location	10-5/8” (270mm)	2-3/8” (61mm)

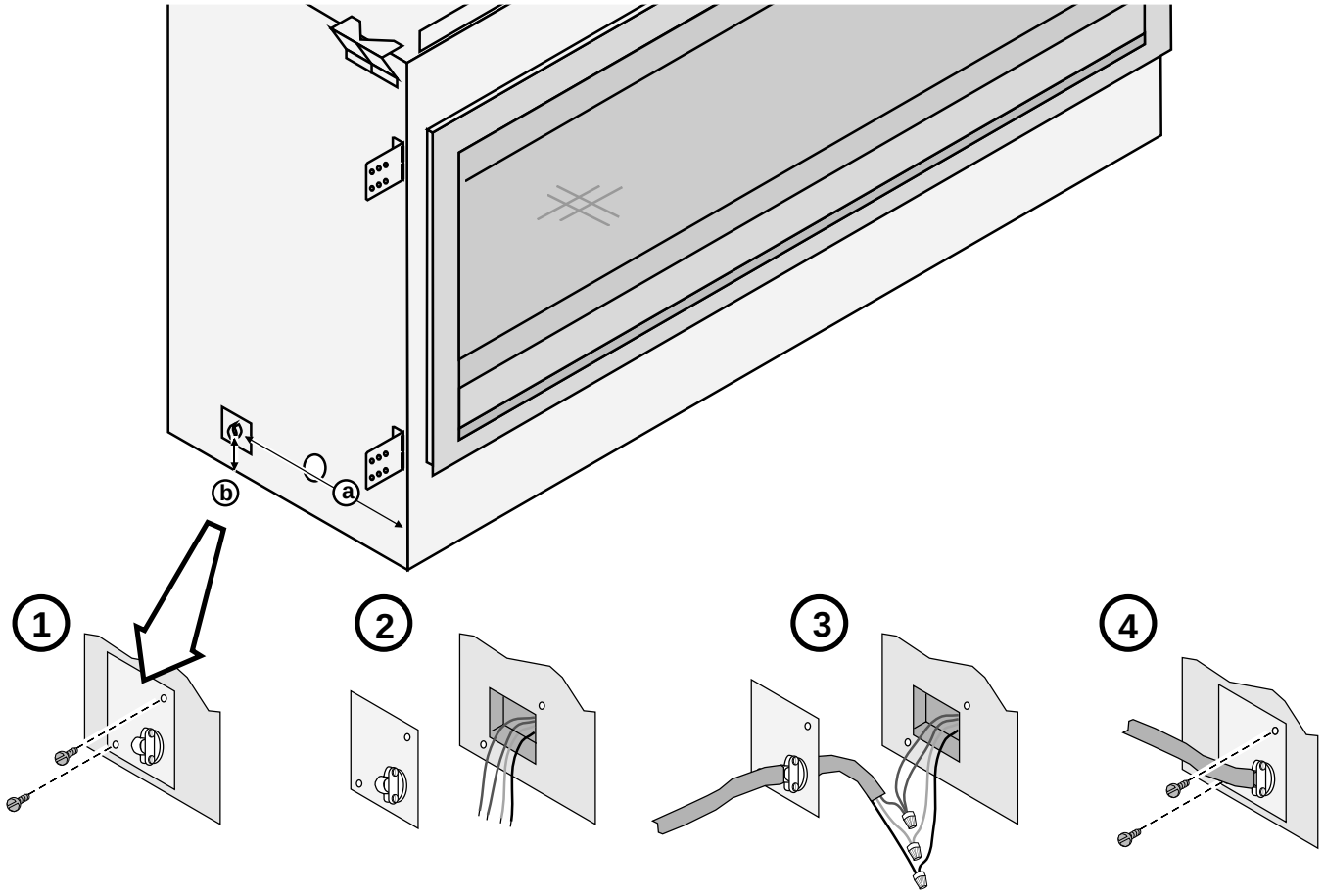

Optional Wall Switch or Thermostat Installation

Do not connect 240 VAC to the gas control valve or wiring system of this fireplace. The switch and wiring must be installed by a qualified installer.

This fireplace includes an optional wall switch (with wire) to operate the fireplace burner without accessing the internal on/off switch. A thermostat may be used instead.

Route the wire from inside the fireplace, through the grommet on either side of the fireplace (see illustration to the right) to the switch. The wall switch (or thermostat) may bypass the fireplace on/off switch or be installed in parallel or series configuration (see below).

Caution: Label all wires prior to disconnection when servicing controls. Wiring errors can cause improper and dangerous operation.

Warning: Make sure all wiring is secure and does not contact hot or moving components.

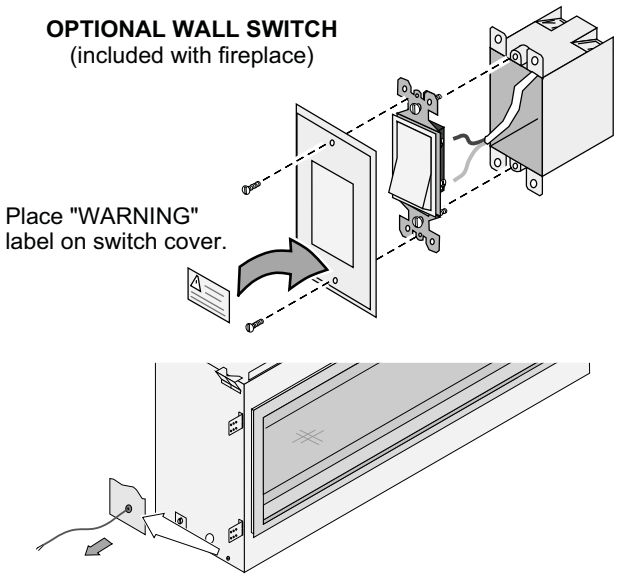

Parallel Connection

	On / Off Switch **ON**	On / Off Switch **OFF**
Thermostat / External Switch **ON**	Heater is **ON**	Heater is **ON**
Thermostat / External Switch **OFF**	Heater is **ON**	Heater is **OFF**

To wire the heater in parallel, follow the directions below:

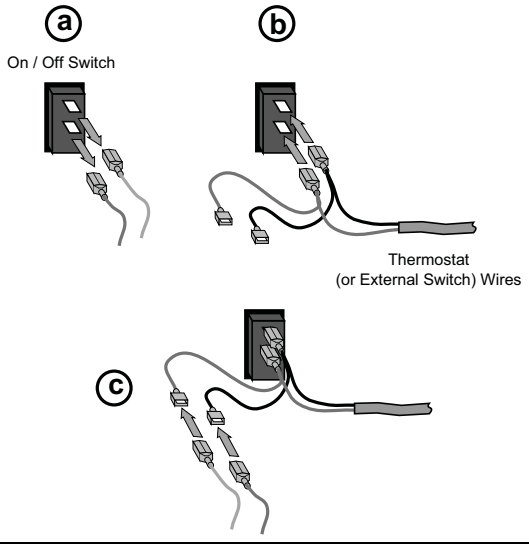

Series Connection

	On / Off Switch **ON**	On / Off Switch **OFF**
Thermostat / External Switch **ON**	Heater is **ON**	Heater is **OFF**
Thermostat / External Switch **OFF**	Heater is **OFF**	Heater is **OFF**

To wire the heater in series, follow the directions below:

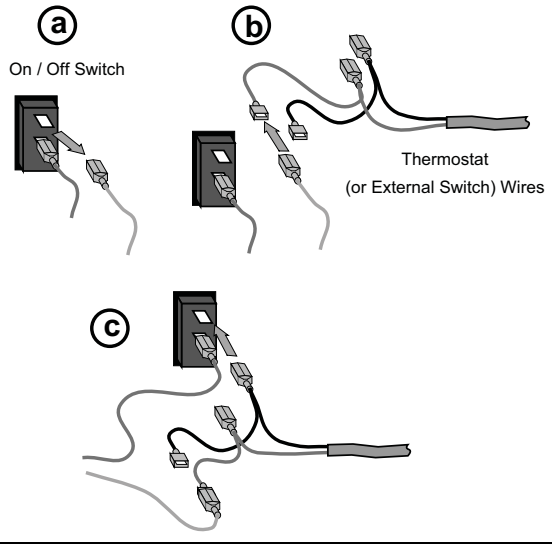

Vent Requirements

- The gas appliance and vent system must be vented directly to the outside of the building, and never be attached to a chimney serving a separate solid fuel or gas-burning appliance. Each direct vent gas appliance must use its own separate vent system.
- In addition to the requirements listed here, follow the requirements provided with the vent.

Vent Clearances

- The vent must maintain the required clearance to combustible materials to prevent a fire. Do not fill air spaces with insulation.

Minimum Vent Configurations (see page 29)

Minimum Clearance Above Vent	1" (26mm)
Minimum Clearance to Sides & Below Vent	1" (26mm)

NOTE: Make sure to use the included wall thimble with this configuration.

All Other Vent Configurations

Minimum Clearance to Vent	1" (26mm)

Vent Firestop or Thimble

- A firestop or thimble is required whenever the vent penetrates a wall, floor, or ceiling (passes through framing members). See vent charts on page 29 and 31 for details

Altitude Considerations

- This heater has been tested at altitudes ranging from sea level to 6,000 feet (1800 M). In this testing we have found that the heater, with its standard orifice, burns correctly with just an air shutter adjustment.
- Failure to adjust the air shutter properly may lead to improper combustion which can create a safety hazard. Consult your dealer or installer if you suspect an improperly adjusted air shutter.

Approved Vent

- Always use the high-wind cap (part # 46DVA-HC, 58DVA-HC, or 46DVA-VCH). The **high-wind sconce cap or snorkel are not allowed**.
- Installation instructions for Simpson Dura-Vent may be found at www.duravent.com.

Minimum Vent Configurations (see page 29)

Use 8" diameter Simpson Dura-Vent Model Direct-Vent Pro (or GS)*.

All Other Vent Configurations

Use 8" or 6-5/8" diameter Simpson Dura-Vent Model Direct-Vent Pro (or GS)* (see vent configuration for details).

* Other vent may be approved with this fireplace. Check with the vent manufacturer for details).

Vent Installation

- Slide the vent sections together and turn 1/4 turn until the sections lock in place.
- Screws are not required to secure the vent. However, three screws may be used to secure vent sections together if desired.
- High temperature sealant is recommended at the appliance starter section connection (use high-temperature silicone or Mill-Pac®).
- If disassembly is required, at time of re-assembly check to see if the vent creates a tight fit. If it does not, apply high temperature sealant to the joints of the affected sections.
- Horizontal sections require a 1/4" (6mm) rise every 12" (305mm) of travel.
- Horizontal sections require non-combustible support every three feet (e.g.: plumbing strap).

Approved Vent Configurations

Exhaust Restrictor Position

- An exhaust restrictor is built into the appliance to adjust the flow rate of exhaust gases. Depending upon the vent configuration, you may be required to adjust the restrictor position. The charts for vent configurations detail the correct restrictor position.

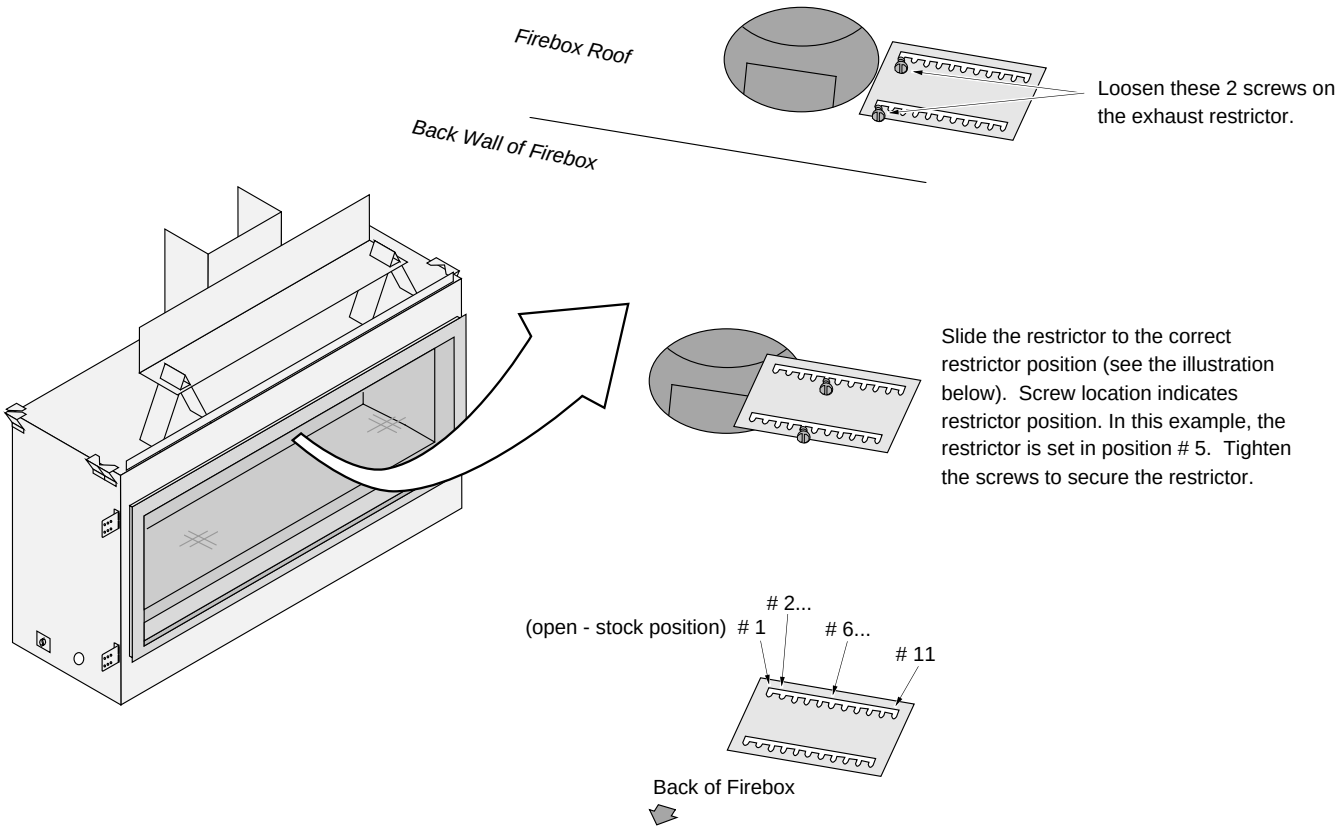

Diffuser

- A diffuser is built into the appliance to adjust the flow rate of exhaust gases. Depending upon the vent configuration, you may be required to adjust the diffuser to the open position (see illustration below). The charts for vent configurations detail the correct diffuser position.

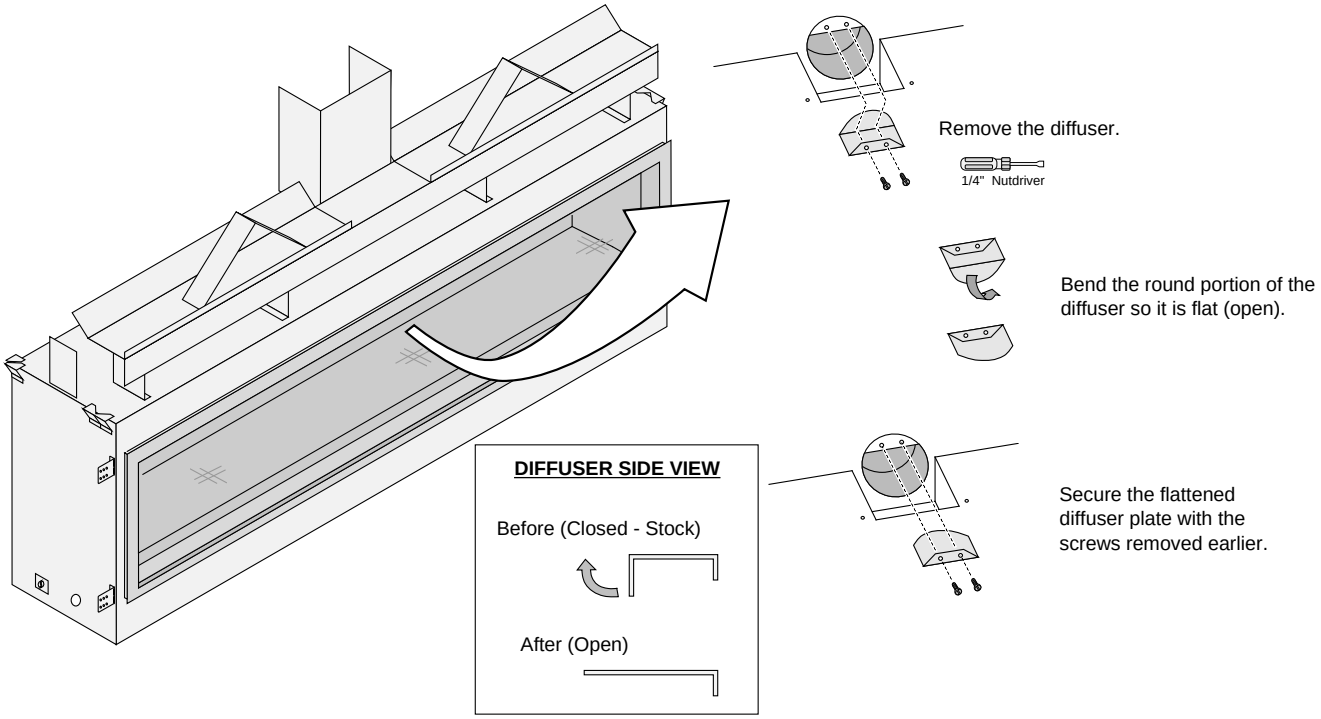

Minimum Vent Configuration

- **Use 5x8" Diameter Coaxial Vent**
- **NOTE**: Use the included thimble assembly whenever passing through a wall. (use on front and back of wall penetration). See picture below.
- The termination must fall within the shaded area shown in the chart. Use the indicated restrictor positions.
- One 45° elbow may be used on the horizontal run.
- **HINT**: Use minimum vent kit "H" (96200332) from Travis Industries (additional vent may be required).

Exhaust Restrictor # 1 (stock)
Diffuser Closed (stock)
8" Vent

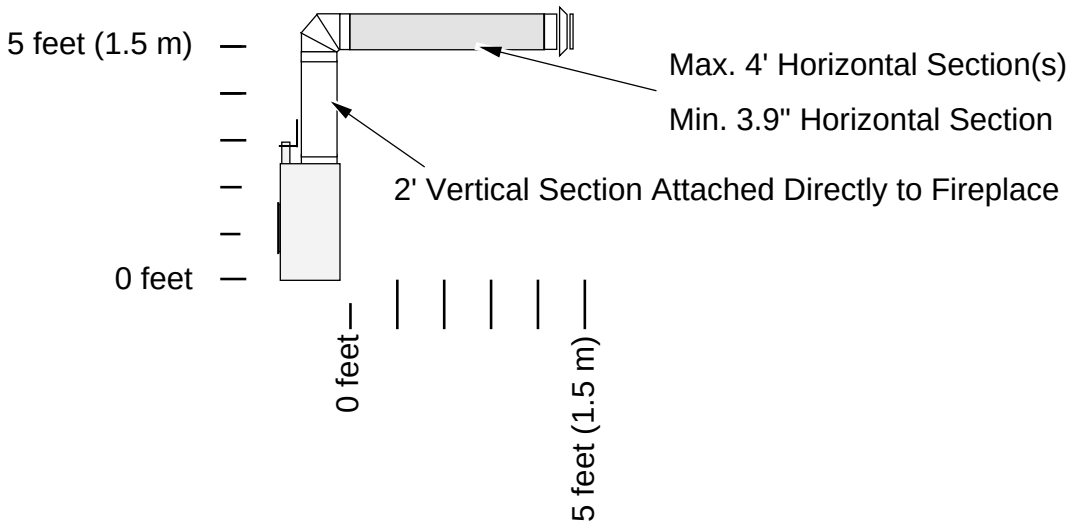

Use the included wall thimble when penetrating a wall. Part #96200101

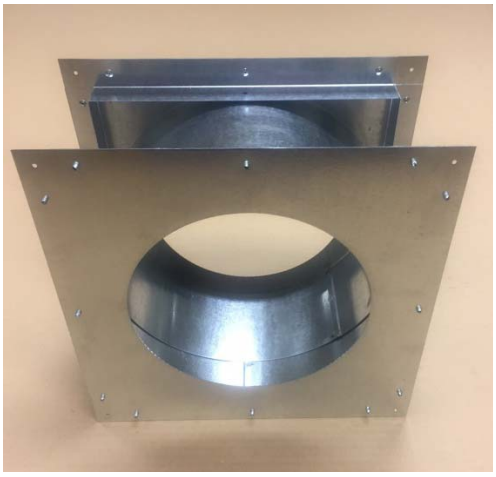

Vent Configuration: Vertical Termination

- **<u>Vent configurations 20’ or above (from the base of the fireplace) use 6-5/8” dia. vent. Connect a 8” to 6-5/8” reducer directly to the fireplace (98900165).</u>**
- **<u>NOTE</u>**: The included thimble assembly is not required and may be discarded.
- The termination must fall within the shaded area shown in the chart. Use the indicated restrictor positions.
- Up to four elbows (45° or 90°) may be used. Only one horizontal elbow may be used.

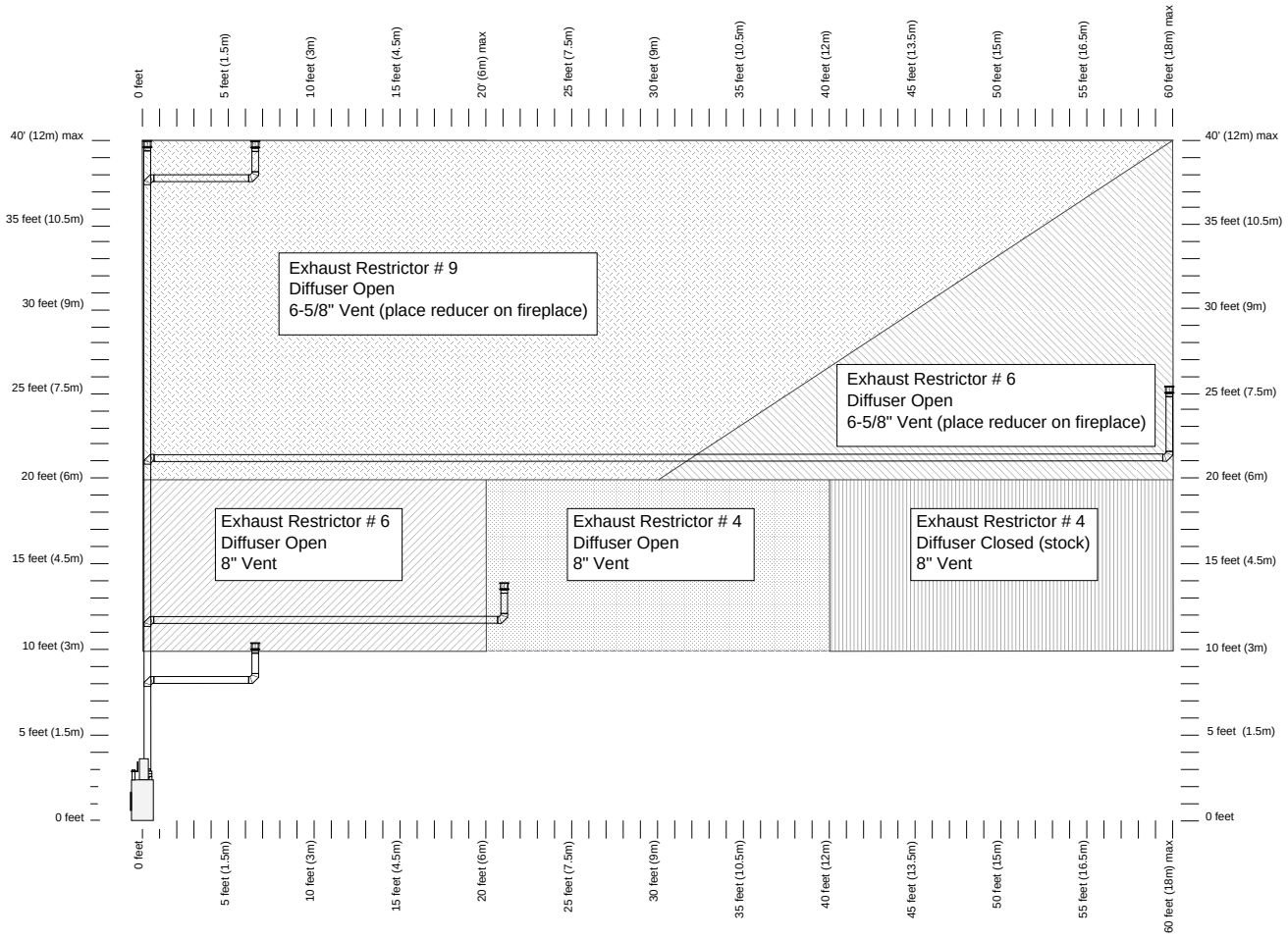

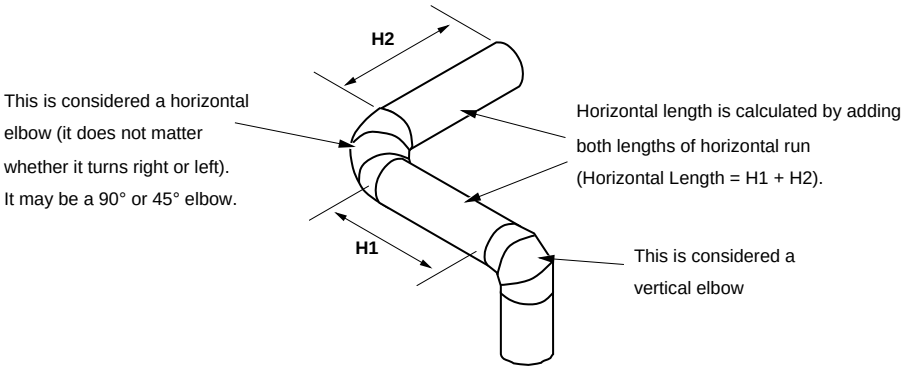

Vent Configuration: Horizontal Termination with Vertical Rise

- **<u>Vent configurations 20’ or above (from the base of the fireplace) use 6-5/8” dia. vent. Connect a 8” to 6-5/8” reducer directly to the fireplace (98900165).</u>**

  <u>NOTE:</u> For this configuration the included thimble assembly is not required and may be discarded.

- **<u>Vent configurations under 20’ (from the base of the fireplace) use 8” dia. Vent</u>.**

  <u>NOTE:</u> For this configuration the included thimble assembly may be used or use a firestop (not included).

- The termination must fall within the shaded area shown in the chart. Use the indicated restrictor positions.
- Up to four elbows (45° or 90°) may be used. Only one horizontal elbow may be used.

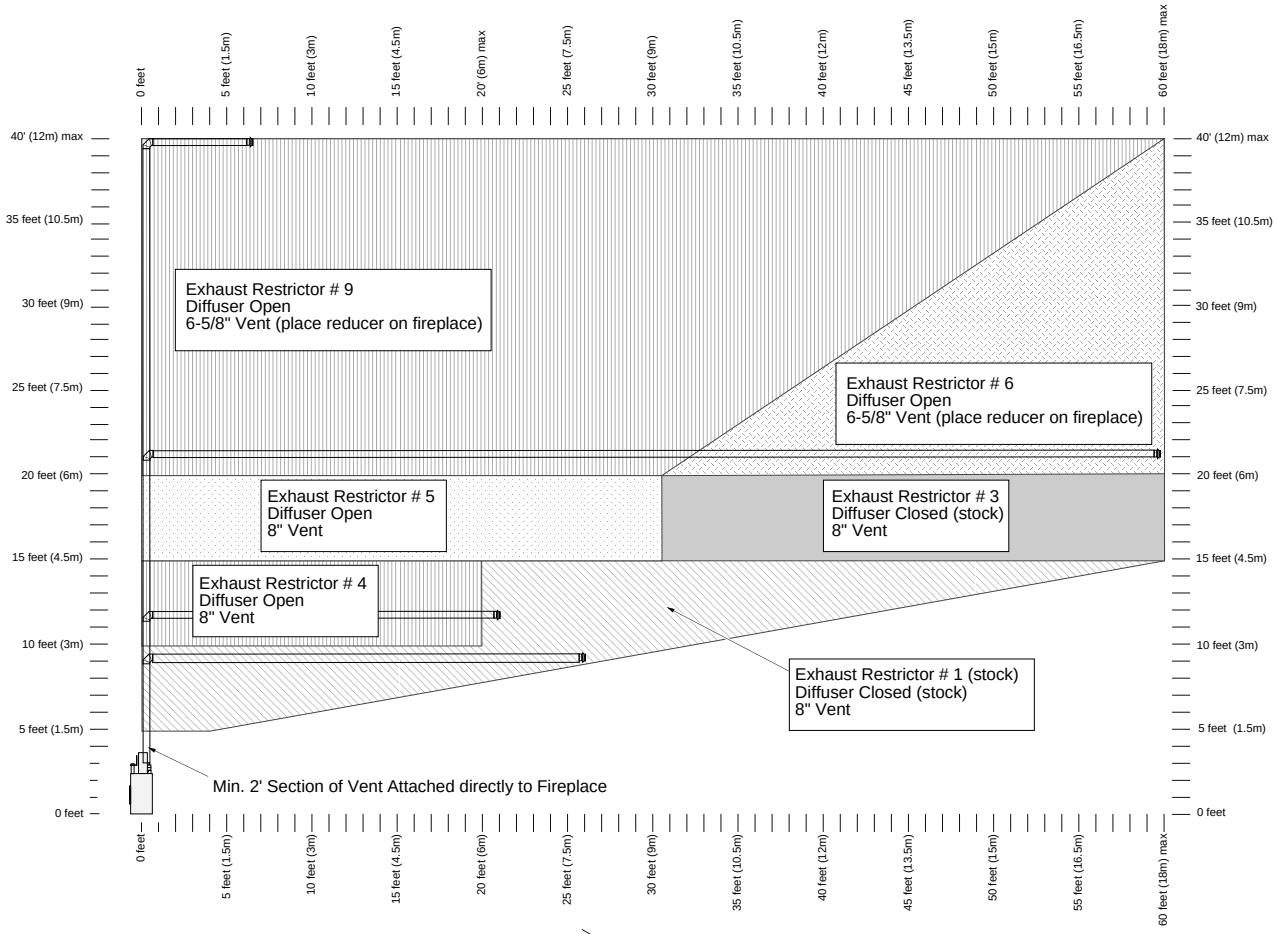

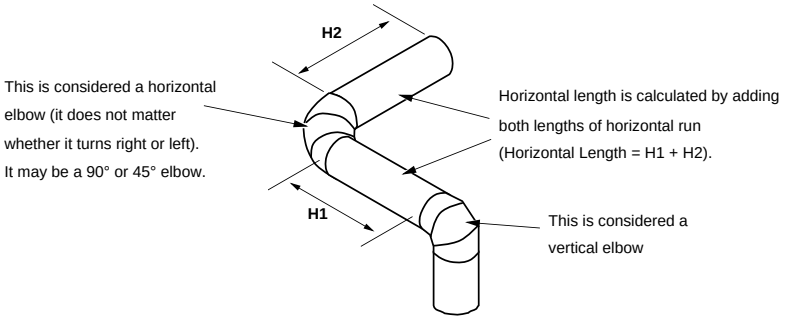

Termination Requirements

! Venting terminals shall not be recessed into a wall or siding.

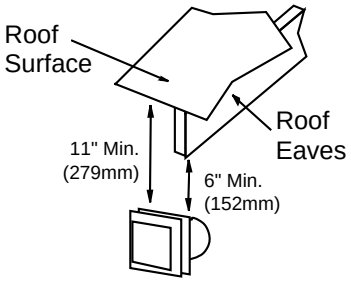

A Minimum 9" (229mm) clearance from any door or window

B Minimum 12" (305mm) above any grade, veranda, porch, deck or balcony

C Minimum 1" (25mm) from outside corner walls
NOTE: Clearance in accordance with local installation codes and the requirements of the gas supplier.

D Minimum 1" (25mm) from inside corner walls
NOTE: Clearance in accordance with local installation codes and the requirements of the gas supplier.

E Minimum 11" (279mm) clearance below unventilated soffits or roof surfaces
Minimum 18" (457mm) clearance below ventilated soffits
Minimum 6" (152mm) clearance below roof eaves
NOTE: Vinyl surfaces require 24" (610mm)
NOTE: Clearance in accordance with local installation codes and the requirements of the gas supplier.

F Minimum 12" (305mm) clearance below a veranda, porch, deck or balcony
NOTE: Permitted only if veranda, porch, deck, or balcony is fully open on a minimum of two sides beneath the floor.
NOTE: Clearance in accordance with local installation codes and the requirements of the gas supplier.

G Minimum 48" (1219mm) clearance from any adjacent building

H Minimum 84" (2134mm) clearance above any grade when adjacent to public walkways or driveways
NOTE: may not be used over a walkway or driveway shared by an adjacent building

I Minimum 9" (229mm) clearance to any non-mechanical air supply inlet to the building or the combustion air inlet to any other appliance.

J Minimum 36" (914mm) clearance above any mechanical air supply inlet if within 10' (3M) horizontally

K Minimum 36" (914mm) from the area above the meter/regulator (vent outlet) - this extends 15' (4.5M) above the regulator
NOTE: Clearance in accordance with local installation codes and the requirements of the gas supplier.

L Minimum 36" (914mm) from the meter/regulator (vent outlet)
NOTE: Clearance in accordance with local installation codes and the requirements of the gas supplier.

M Minimum 12" (305mm) above the roof line (for vertical terminations)

N Minimum 24" (610mm) horizontal clearance to any surface (such as an exterior wall) – for vertical terminations

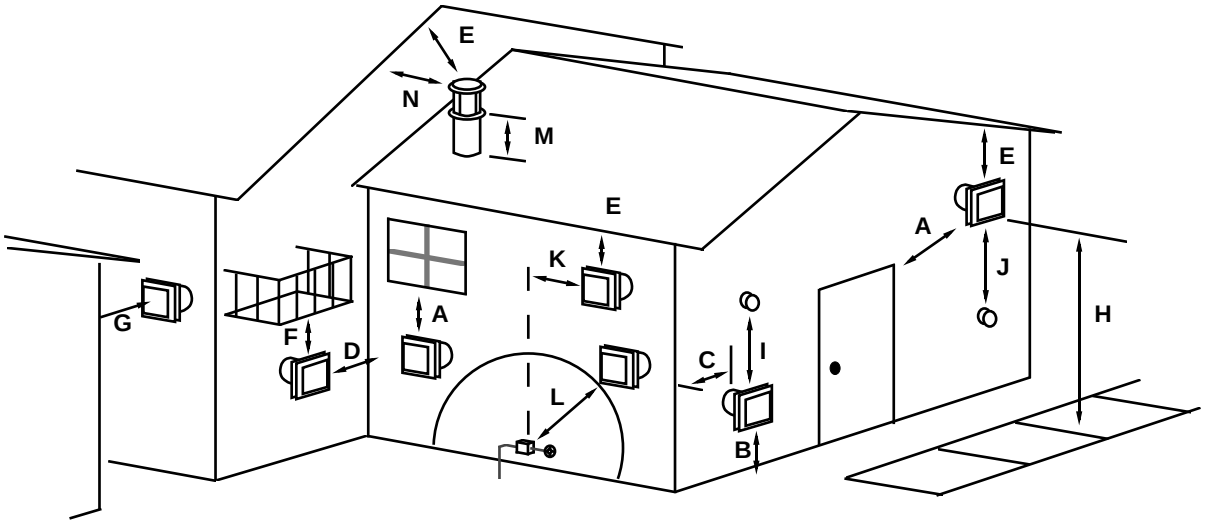

NOTE: Measure clearances to the nearest edge of the exhaust hood.

Hearth Requirements

- If installed near carpet or other combustible flooring, the fireplace must be raised so the base of the unit is above the carpet surface or flooring material. If the heater is installed at floor level, we recommend a non-combustible hearth to protect the flooring surface from discoloration or other negative impact from the heater.
- A non-combustible hearth may be constructed in front of the fireplace (see illustration below).

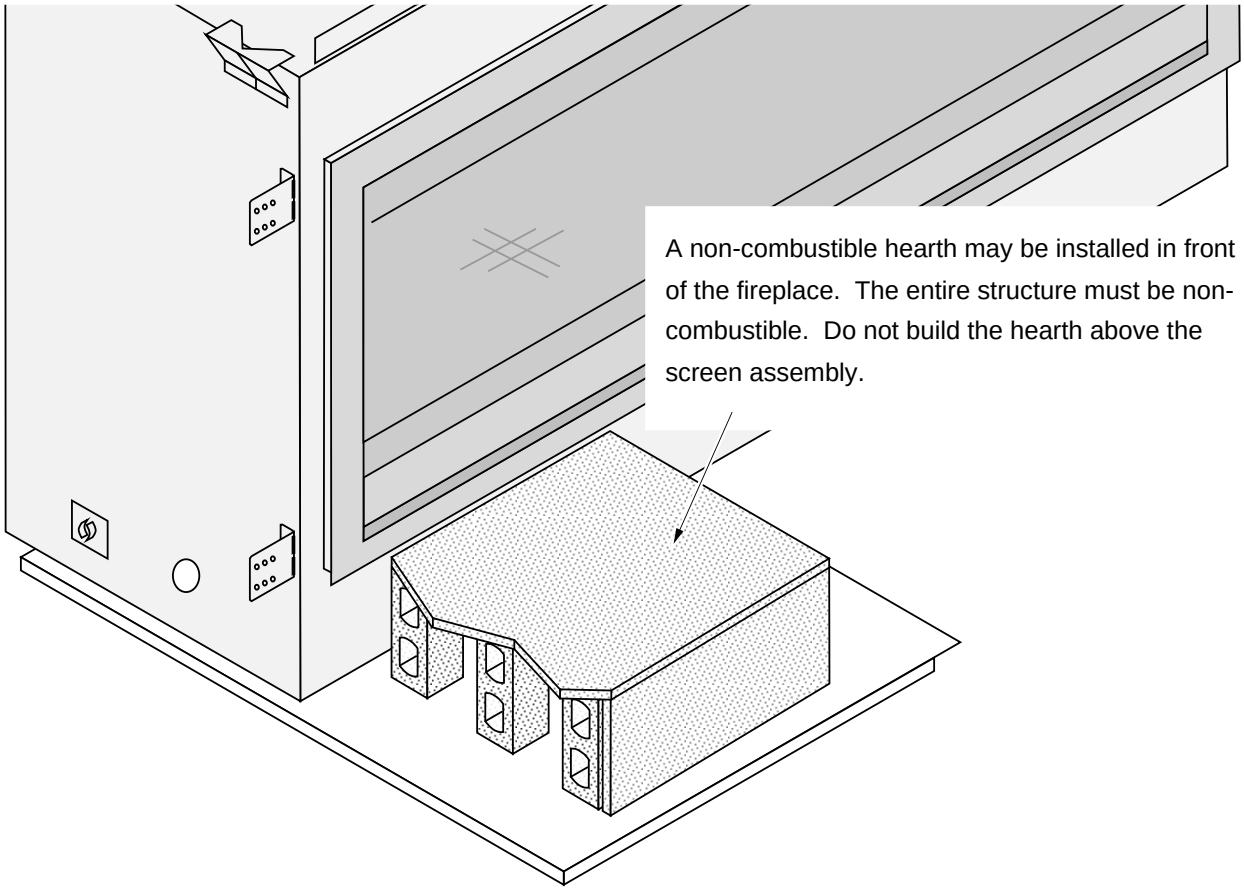

Facing Requirements

- Non-combustible facing must extend from the base of the fireplace to 35-1/2”(902mm) above the base of the fireplace (see illustration below for details).
- Non-combustible facing must extend the entire width of the unit to the framing opening on both sides.
- Do not place facing over the glass opening.
- Drywall (or other combustible) may be placed above the non-combustible facing (35-1/2”(902mm) above the base of the fireplace). See illustration below for details.
  WARNING: **Do not place drywall or other combustibles over the front of the fireplace.**

WARNING: Do not use adhesive to secure the facing. The high temperatures of the fireplace may cause adhesives to emit odors. Use mastic or thin set (or other non-combustible, non-odorous adherent) to attach the facing.

NOTE: Screws may be used to secure cement board or tile backer to the fireplace. Do not penetrate the fireplace more than 1/2”(13mm).

1/8" (3mm) Gap

Make sure non-combustible board is cut and positioned so it maintains a 1/8" (3mm) gap from the tile stop. This allows the fireplace structure to expand without cracking the facing (see dimensions below).

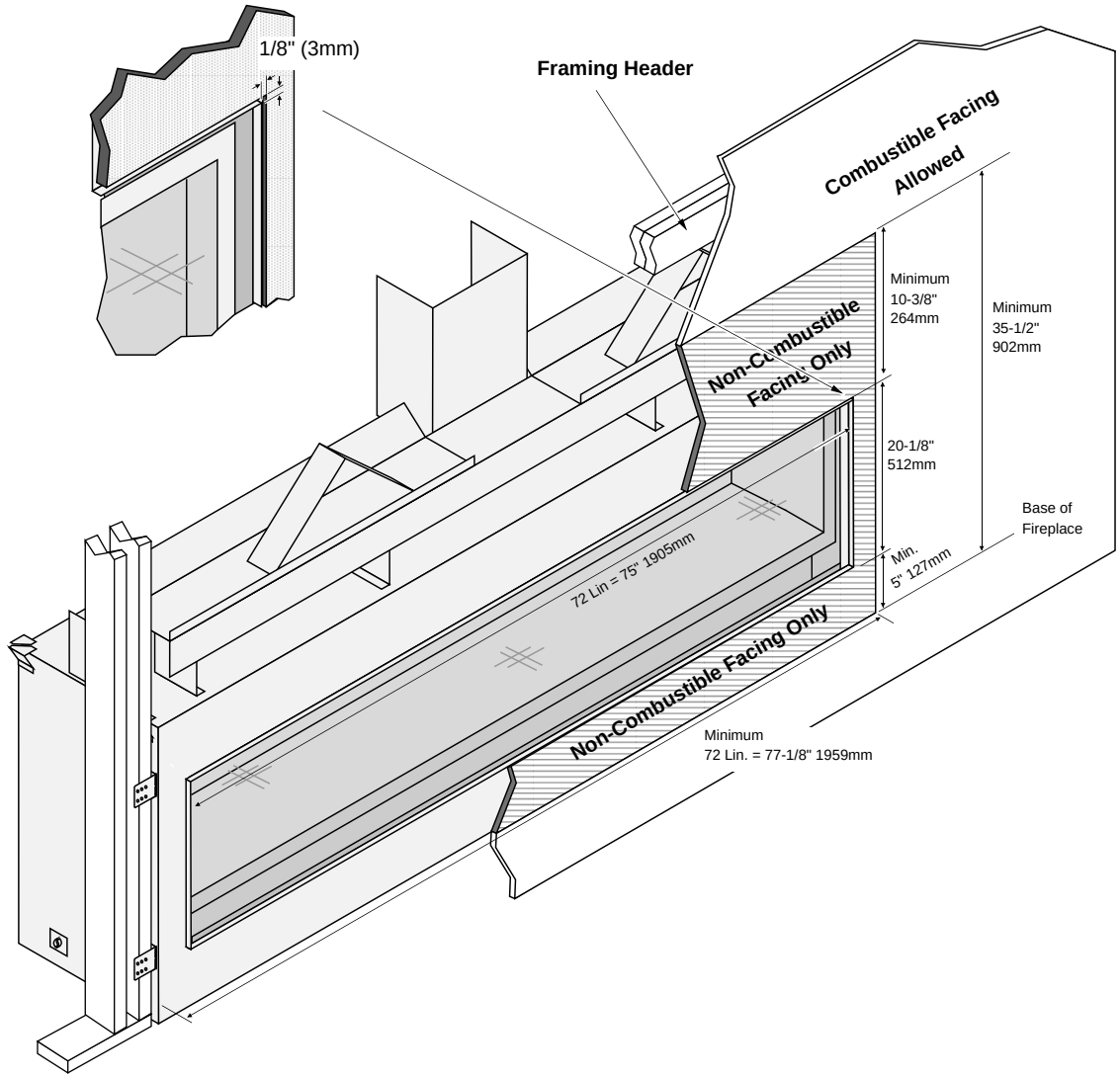

Standard vs. Extended Position

- The nailing brackets on the side of the fireplace may be placed in the standard or extended position to best suit the facing being used (the header shield is also moved). Most installations use the standard nailing bracket position. If using a facing that does not use a backing board (e.g. marble), you may wish to use the extended position.

Standard Position - Top View

(nailing brackets as shown to right)

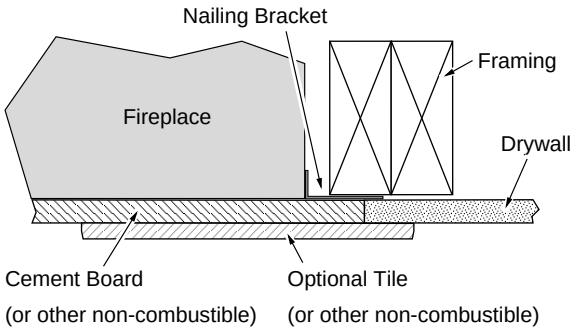

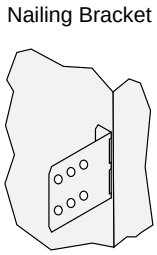

Extended Position - Top View

(nailing brackets as shown to right)

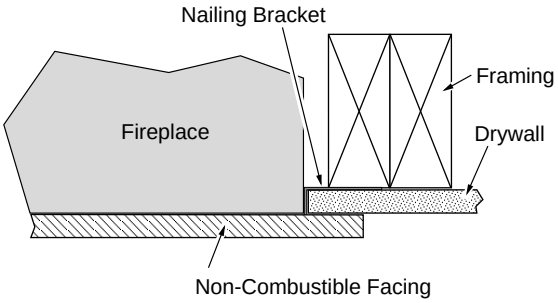

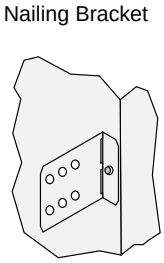

Facing Thicker than 1-1/2” (38mm)

The screen assembly may be positioned 1/2”(13mm) to 1-1/2”(38mm) from the front of the fireplace to allow facing to tuck under the screen assembly. Facing thicker than 1-1/2”(38mm) may also be used, however the screen assembly will be recessed into the facing rather than overlapping facing.

NOTE: Pay close attention to the following thick facing requirements when planning installation of facing material over 1-1/2”(38mm) thick.

If facing greater than 1-1/2” (38mm) is used, make sure to leave a 3/8"(9.6mm) gap above the screen assembly and 1/8”(3 mm) to the sides and below. This gap is required to allow for the screen assembly to be removed.

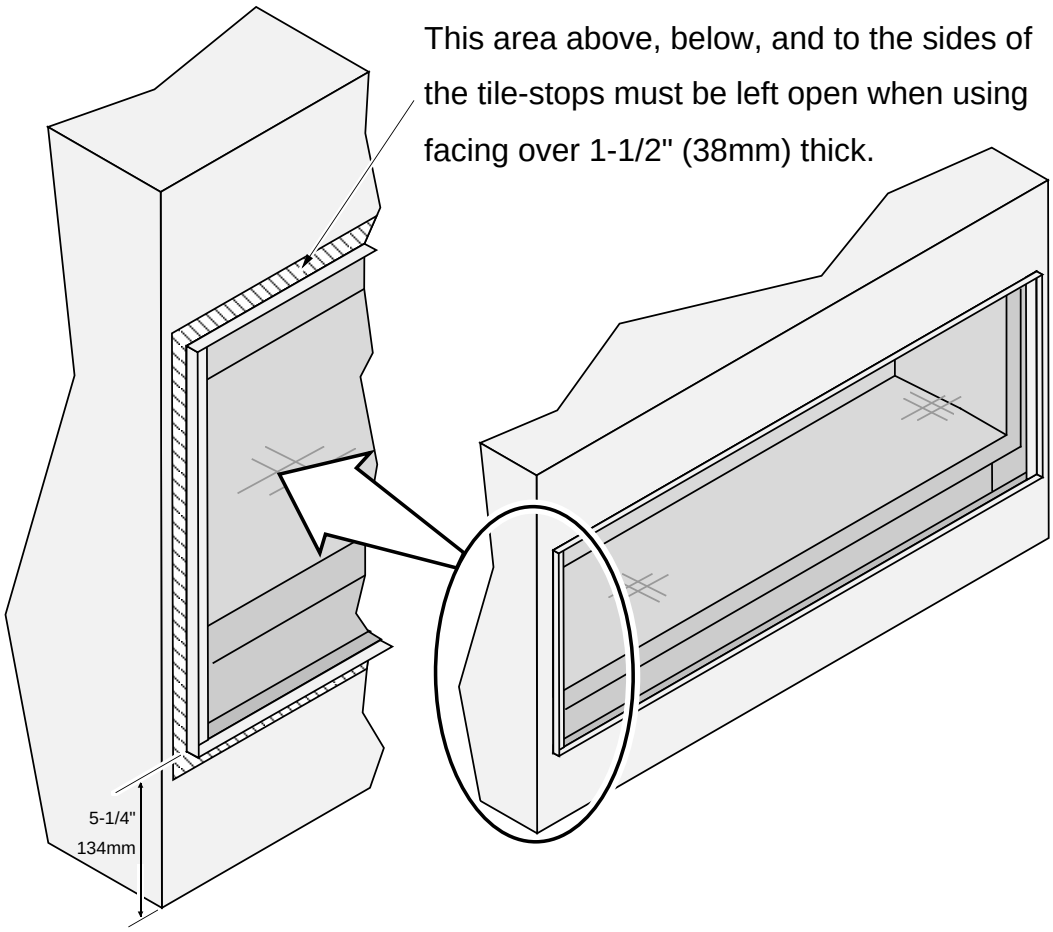

	Above Tile Stop	Sides of Tile Stop	Below Tile Stop
MINIMUM GAP This provides 3/8” (9.5mm) gap above screen assembly, 1/8” (3mm) gap to the sides and below.	3/4”(19mm)	5/8”(16mm)	3/8”(9.5mm)
UNIFORM GAP This provides 3/8” (9.5mm) gap around all sides of the screen assembly.	3/4"(19mm)	7/8”(22mm)	5/8”(16mm)

Screen Assembly Mounts

The screen assembly mounts (located on outer front edges of the fireplace) are adjustable to allow the screen assembly to be positioned 1/2" to 1-/12" from the front of the fireplace. This allows facing to tuck under the screen assembly. Each mount is held in place by (3) Philips head screws. Before mounting the screen assembly, adjust the mounts so that the front edge is flush with the finish material surrounding the fireplace. To adjust the mounts, loosen the screws, slide the mounts to the desired position, then tighten the screws.

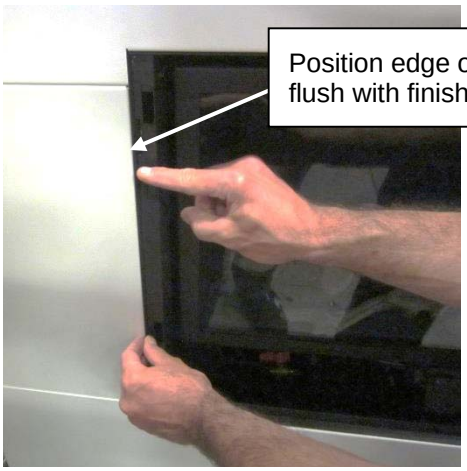

Thin Facing (1/2" 13mm) - Top View

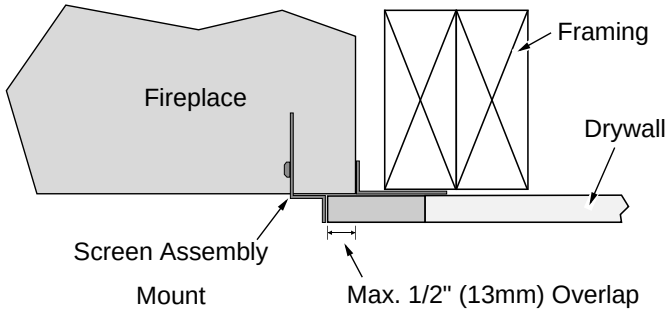

Thick Facing (1" 26mm) - Top View

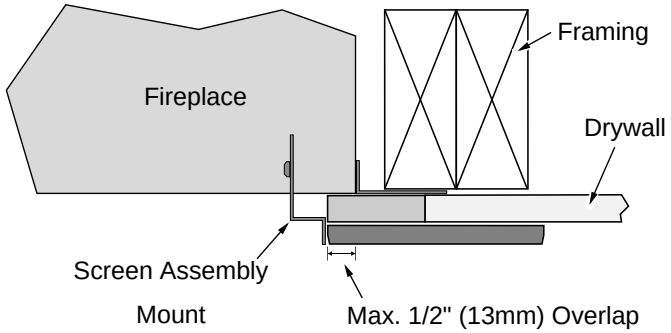

Do Not Drill or Screw Zone

When using screws to secure tile-board or other non-combustible to the front of the fireplace, make sure to avoid the area on the front of the fireplace that is painted with the “DO NOT DRILL” shading. Make sure screws penetrate no more than ½” (13mm) into the fireplace.

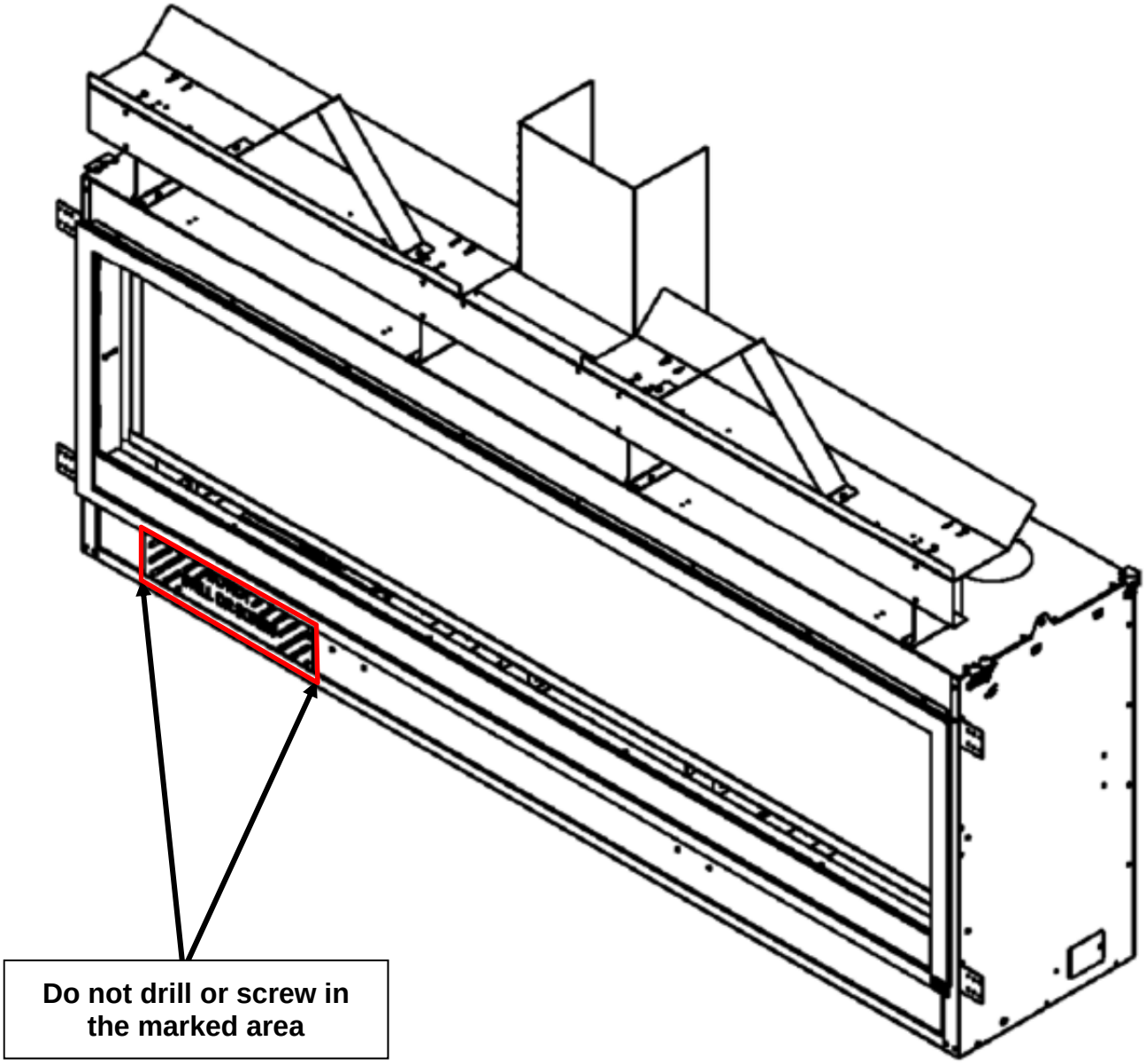

Mantel Requirements

- Use the table below to determine the maximum mantel depth allowed. The mantel depth (measured from the non-combustible facing) must fall within the shaded portion of the table.
- Any material above the fireplace that protrudes more than 3/4" (19mm) from the non-combustible facing is considered a mantel and must meet the mantel requirements.

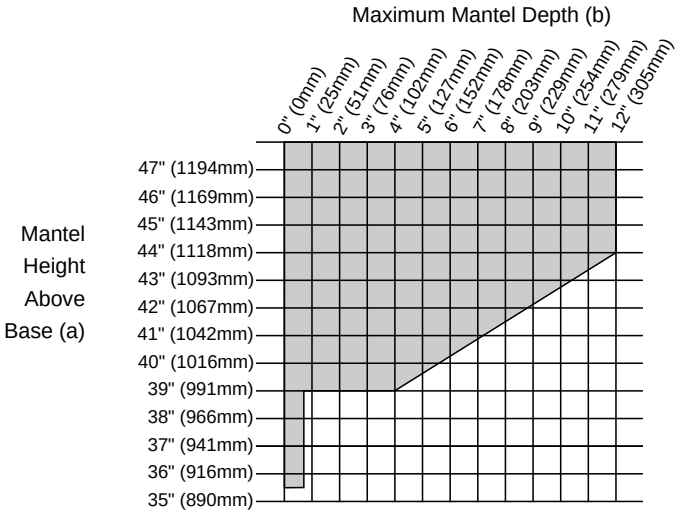

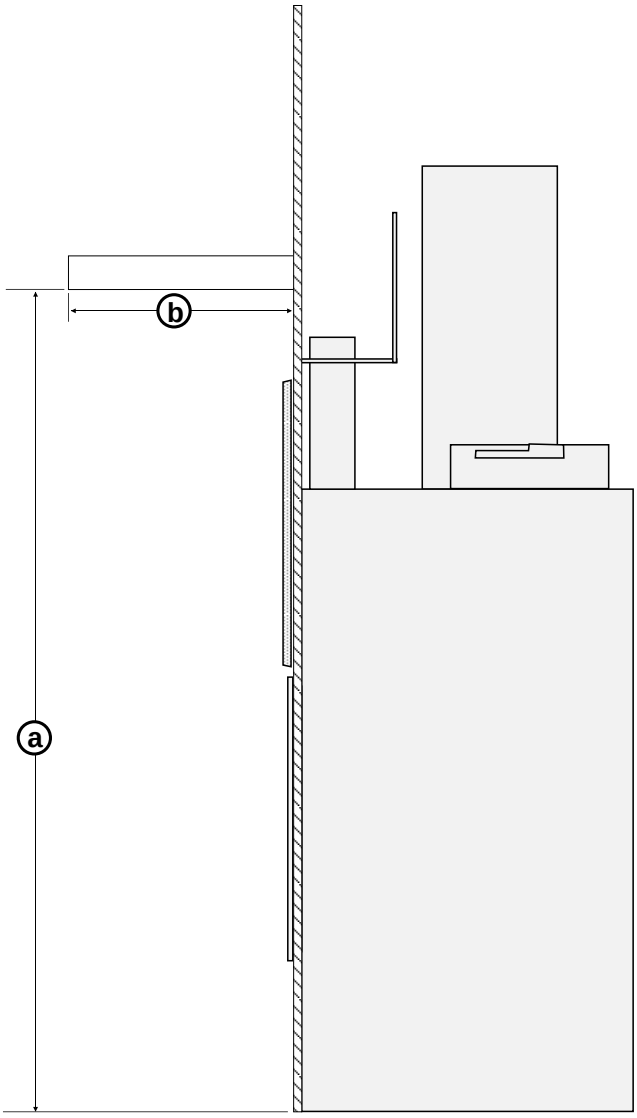

Mantel Column Clearances

- Combustible mantel columns (legs) require a 0" (0mm) clearance to the side of the fireplace (they must be to the side of the fireplace).
- Non-combustible mantel columns do not have a minimum clearance.

Use of a Non-Combustible Mantel Below Listed Mantel Clearances

Each gas fireplace has a unique set of mantel requirements. If you wish to place a non-combustible mantel at a lesser height than specified in this manual, it will need to meet the following requirements:

- The header (the framing member above the fireplace opening) must be non-combustible.
- The facing must be non-combustible and extend to the header (or mantel, whichever is greater). The facing must also span the entire width of the mantel.
- See the illustration below for additional requirements.

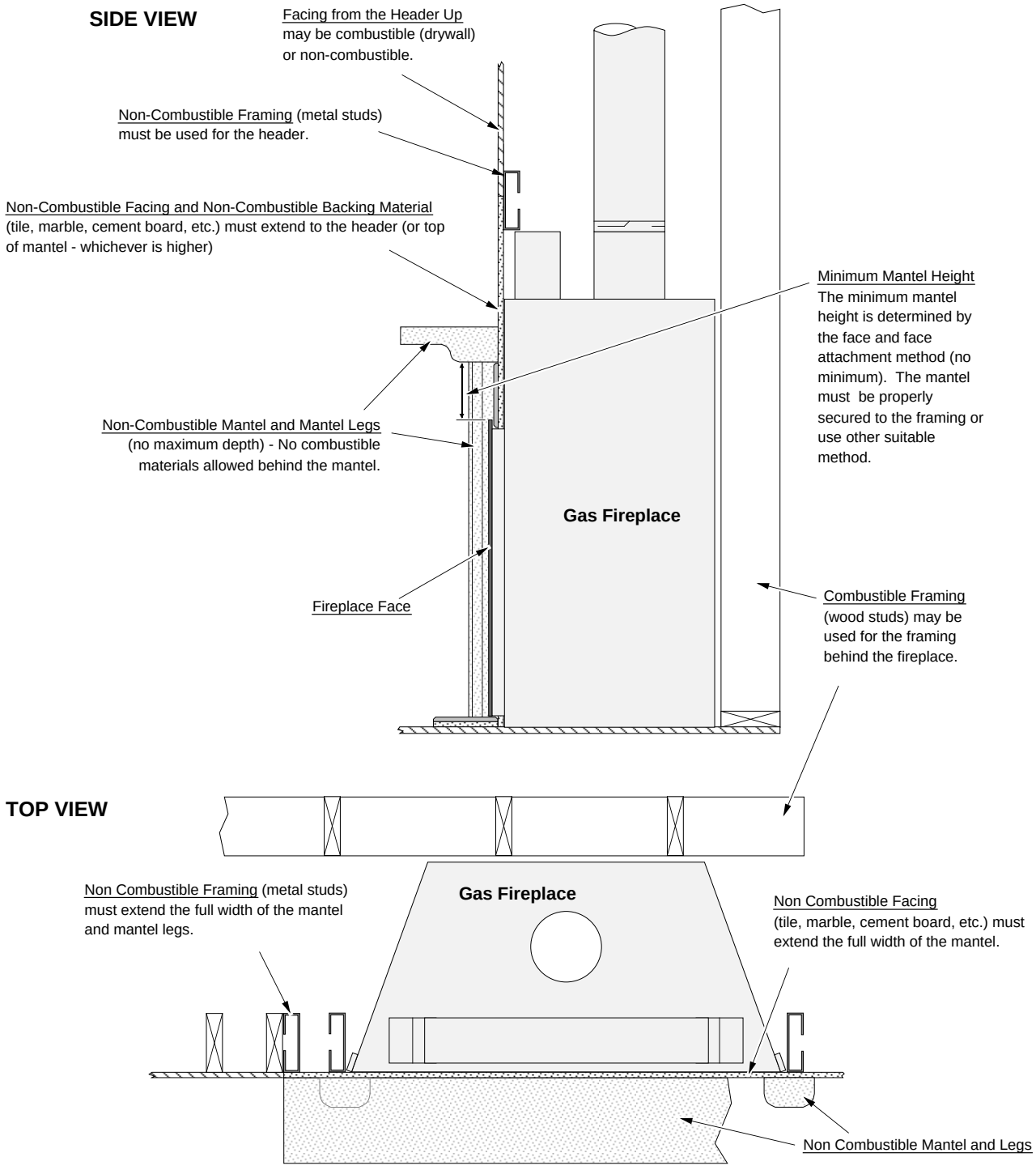

Finalizing the Installation

1. Remove the glass (see page 44).

   NOTE: If using propane (LP) convert the appliance prior to installing the media.

2. We recommend you purge the gas line at this time (**with the glass removed**). This allows gas to be detected once it enters the firebox, ensuring gas does not build up.

Install the batteries into the battery holder

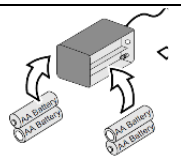

3. Turn on gas to the heater. Leak test all gas joints prior to starting the appliance. Start the pilot to verify gas supply. Leak test all the gas joints. Turn the gas control knob to "OFF" to shut off the appliance.

GSB2 Units Only - Pilot Flame Inspection

The pilot flame should look like the illustration below. Adjust the pilot flame if necessary.

The pilot flame should look like the illustration below. Adjust the pilot flame if necessary.

To adjust the pilot flame, turn this screw. Clockwise lowers the flame while counter-clockwise raises it.

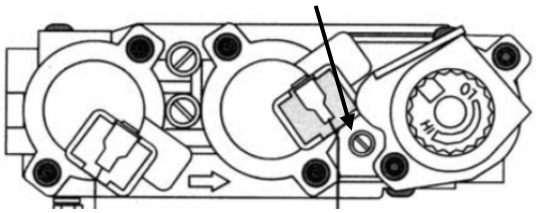

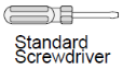

The pilot flame should touch the top 3/8" of the sensing electrode and make contact with the pilot hood. Adjust the pilot up or down as necessary.

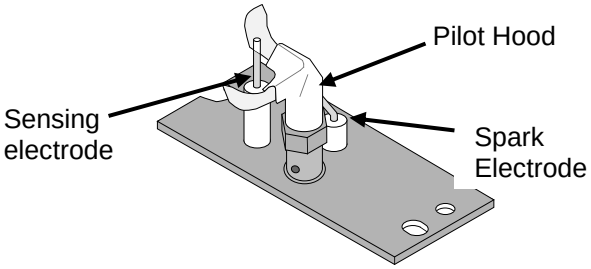

4. Replace the glass.
5. Start the main burner and verify the burner ignites correctly.
6. Leak test all gas joints.

Air Shutter Adjustment

Let the heater burn for fifteen minutes (make sure the logs and glass are in place). The flames should be yellow with no sooting. Adjust the air shutter, if necessary, to achieve the correct looking flame.

Air Shutter Adjustment

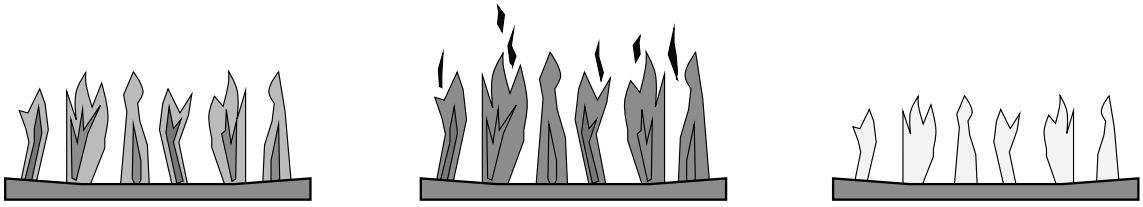

Correct

Flames should be blue at the base, yellow-orange on the top.

Not Enough Air

If the flames are too tall or sooty on the ends, open the air shutter.

Too Much Air

If the flames are all blue and short, close the air shutter.

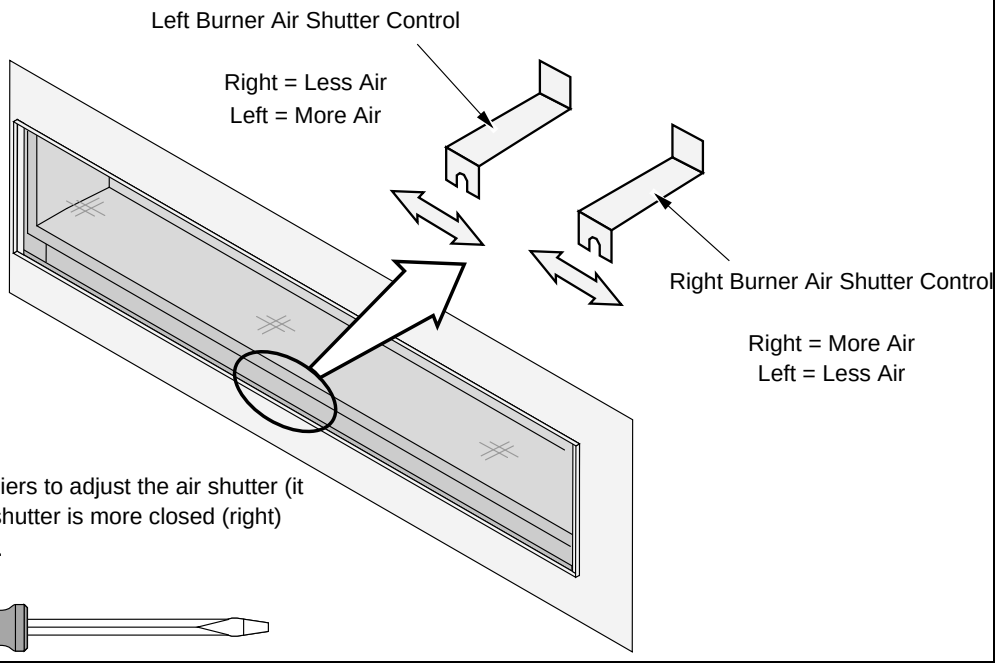

NOTE: Use a screwdriver or pliers to adjust the air shutter (it will be hot). Typically, the air shutter is more closed (right) on NG, more open (left) on LP.

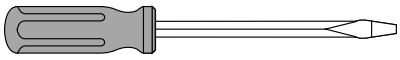

7. Adjust the flame to its highest position - the flames should not contact the top of the firebox. Check the flame on low position. The flames should burn off of each burner hole. If the heater does not work correctly, contact your Travis dealer for a remedy.
8. Give this manual to the home owner for future reference and fully explain operation of this heater. For comprehensive operating and maintenance instructions, refer to the Owner's Manual.

ACID WASH WARNING: Make sure any masonry that has been treated with acid wash has been properly neutralized (this is used primarily with brick faces). Acid wash (muriatic acid) is used to remove excess mortar.

Location of Controls

There is a door on the lower portion of the screen assembly to provide access to the manual controls on the fireplace. The door is held closed by two magnets. Open the door by gently pulling outward on the upper portion of the lower trim.

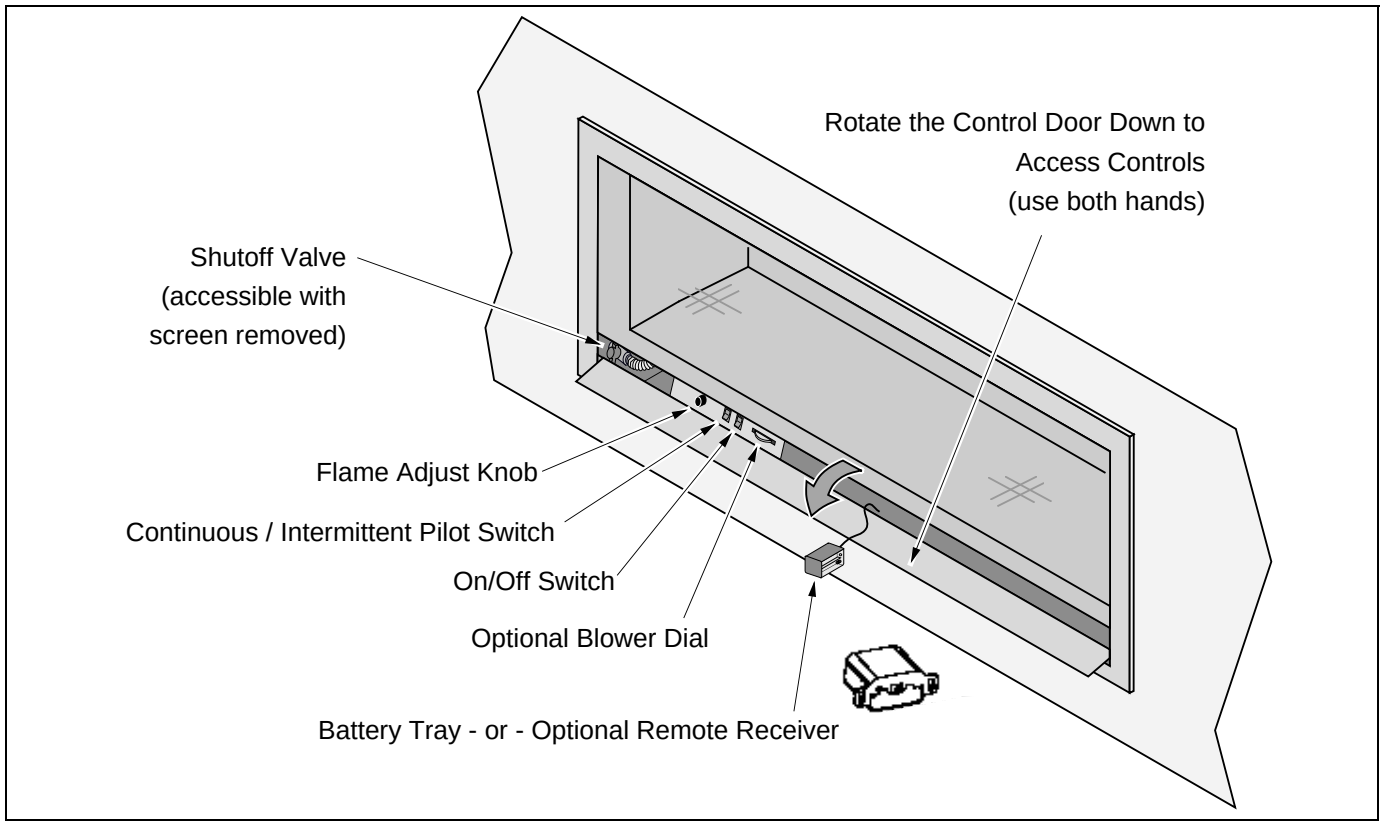

Glass Frame Removal and Installation

A barrier designed to reduce the risk of burns from the hot viewing glass is provided with this appliance and shall be installed for the protection of children and other at-risk individuals.

If the barrier becomes damaged, the barrier shall be replaced with the manufacturer's barrier for this appliance.

The appliance must be completely cool before removing the glass.

Do not strike or slam the glass.

Warning: Do not operate appliance with the glass front removed, cracked or broken. Replacement of the glass should be done by a licensed or qualified service person.

1. Remove the screen-trim assembly by lifting the assembly up slightly and tilting it toward you. The mounting hooks on the back of the assembly will disengage the fireplace. Set the assembly aside for reinstallation.

NOTE: Opening the access door on the front of the assembly allows for a easy location to get a secure grip on the assembly for removal

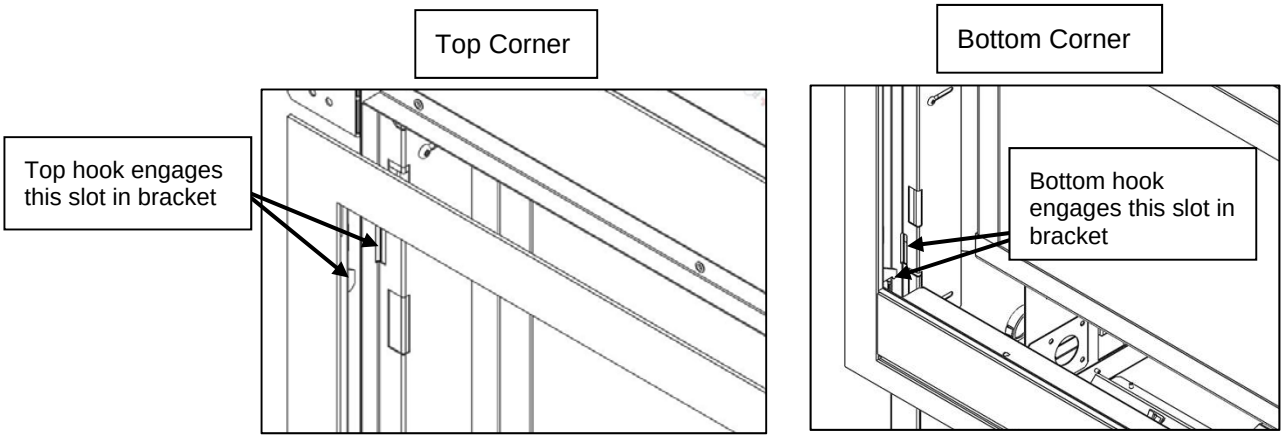

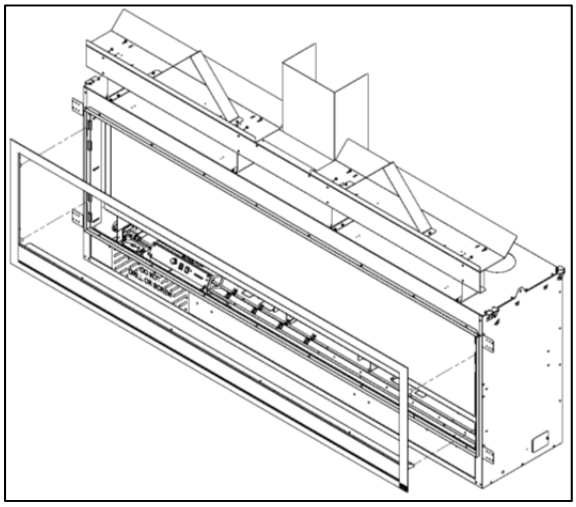

	Replacement Barrier Part #
72 ProBuilder	270-01991

2. Remove the glass frame following the directions below.

a Open the latches holding the glass frame in place (start with the bottom) - follow the directions shown to the right.

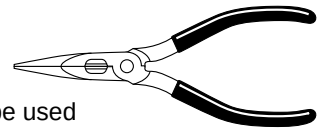

Pliers may be used

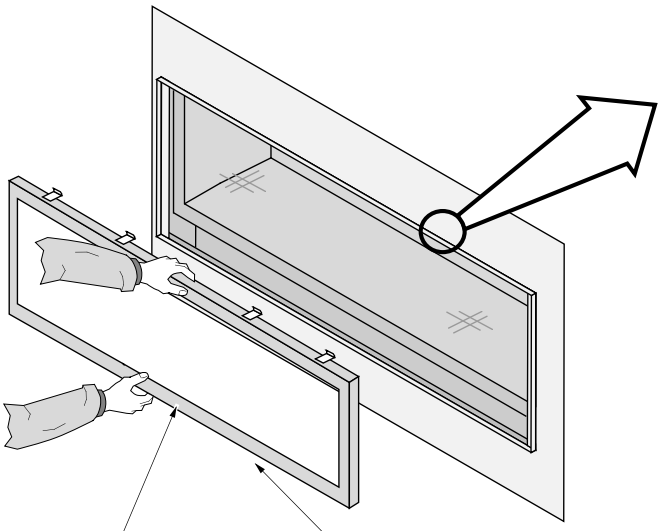

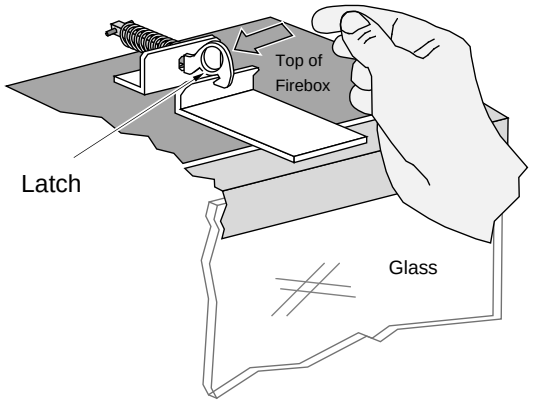

b Lift the glass frame up and pull it forward to remove.

NOTE:
You may need to lift the glass frame while re-attaching.

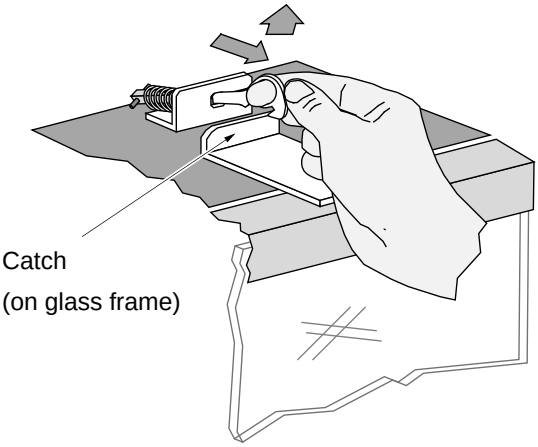

Re-Attaching the Glass Frame:

a) Hang the glass frame on the firebox.

b) While holding in place, attach the upper latches (follow the instructions to the right in reverse).

c) Lift the glass frame slightly and attach the lower latches.

NOTE: Make sure the glass frame is all the way in place - it should be parallel with the front of the fireplace when installed.

NOTE: Make sure the glass frame is all the way in place – It should be parallel with the front of the fireplace when installed.

	Replacement Glass Frame Part #
72 ProBuilder	270-01992

The latch can come loose from glass frame anchor. This occurs when it is turned 1/4 turn when it is disengaged. Follow the directions below to re-install the latch if it becomes loose.

Hold the latch at an angle and insert it into the slot on the glass frame anchor.

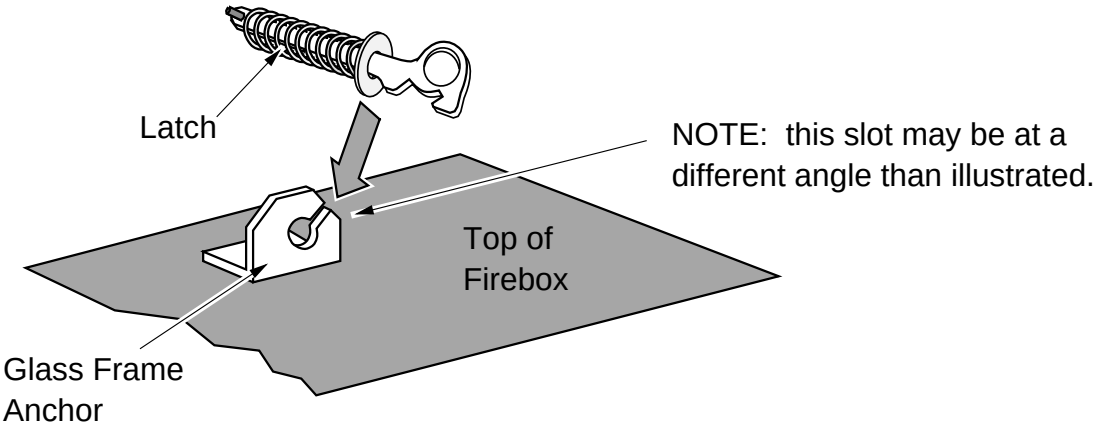

Note how the washer on the latch fits behind the flange on the glass frame anchor.

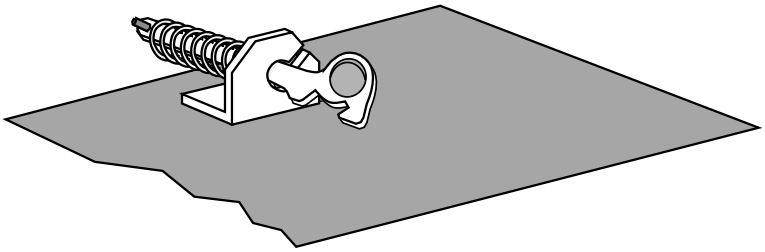

Once fully inserted, turn the latch until it is upright.

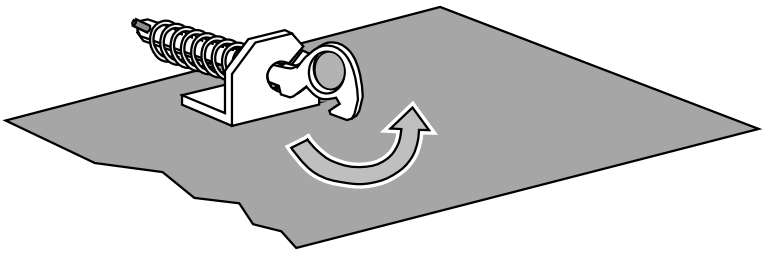

Crushed Glass Installation

Do not allow the crushed glass to block the air slots or to become too thick (maximum 1 layer deep on the burner). Failure to properly install glass may lead to sooting and improper burning.

If converting to LP (propane), convert the appliance prior to placing the crushed glass.

Install the crushed glass on the glass tray following the directions below.

Quantity of Crushed Glass	10 lbs. (4.5 Kg)

1 Remove the 16 screws that secure the media tray to the unit (see picture below – only showing one-half of the tray due to length).

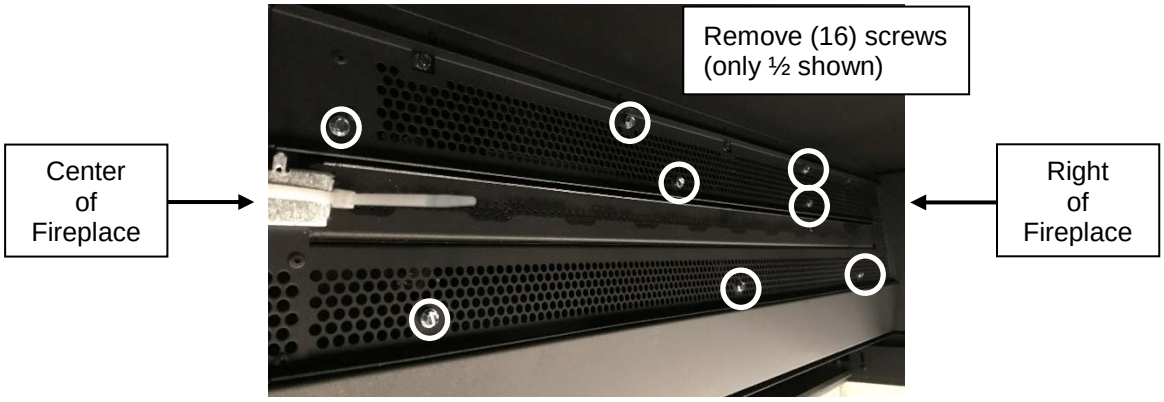

2 Remove the media tray from the unit to access the pilot assembly underneath. Remove the silicone sleeve that is shipped on the spark electrode. Re-install the Media tray. Make sure that the setup pilot cover is installed over the pilot assembly before adding glass

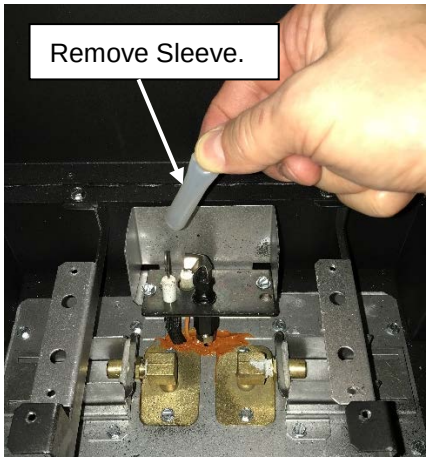

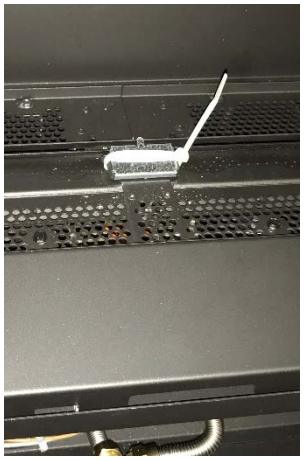

3 Spread an even layer of crushed glass over the media tray and burner. The glass must be only 1 layer thick on the burner but can be 2 layers thick on the media tray. **Make sure no glass is in the pilot area** indicated in the picture below.

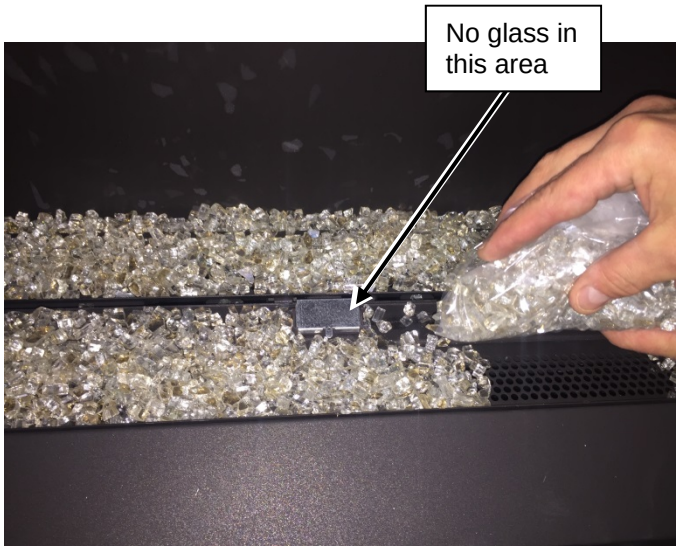

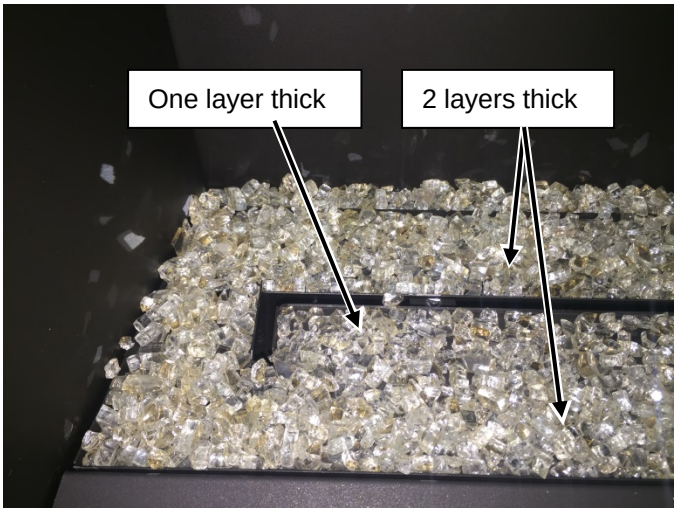

4 Make sure the rear and end air channels are free of crushed glass. Use a screwdriver to clear this area. **Make sure the glass is only 1 layer deep on the burner.**

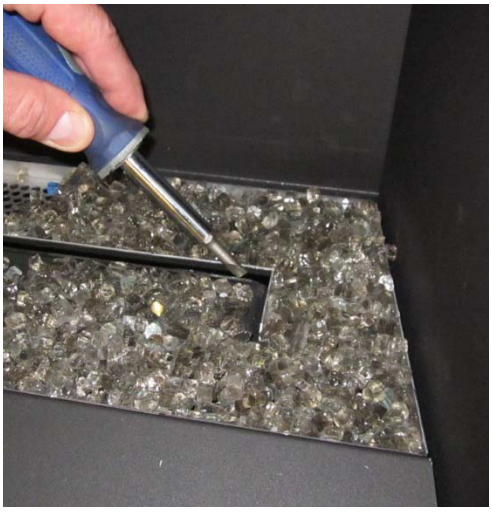

5 Remove the pilot shield to uncover the pilot once you are finished placing the glass.

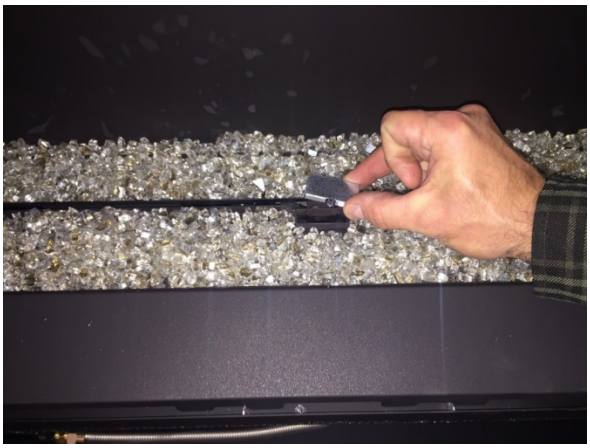

LP Conversion Instructions

WARNING
This conversion kit shall be installed by a qualified service agency in accordance with the manufacturer's instructions and all applicable codes and requirements of the authority having jurisdiction. If the information in these instructions is not followed exactly, a fire, explosion or production of carbon monoxide may result causing property damage, personal injury or loss of life. The qualified service agency is responsible for the proper installation of this kit. The installation is not proper and complete until the operation of the converted appliance is checked as specified in the manufacturer's instructions supplied with the kit.

The parts required to convert this appliance to us LP gas are included in the stove pack that was shipped with the appliance. The conversion kit contains the LP manual regulator and Torx wrench, burner orifice, and pilot orifice.

1. Access the firebox.

2. Remove the media tray. Remove the 17 screws holding it in place (1/4" nutdriver). (Due to the length of the unit we are only showing one half of the media tray).

3. Remove both burners. Each is held in place with 6 screws (1/4" nutdriver).

4. Use a ¼" nut driver to remove (4) screws (2/per side) securing the air shutter retainers (left and right) to the fireplace. Remove retainers to gain access to the burner orifices (set the retainers and screws aside for reinstallation).

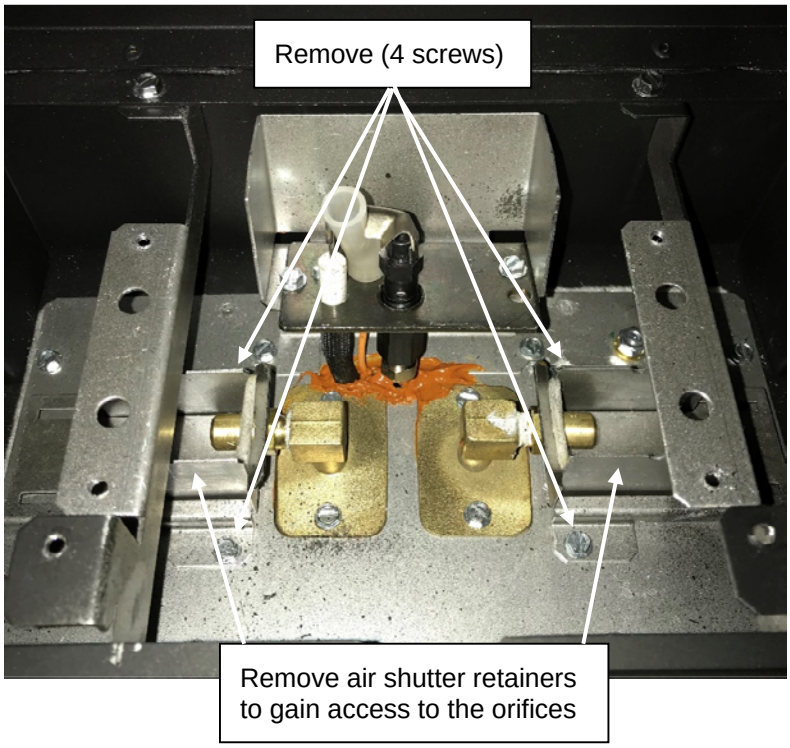

5. Follow the directions below to replace the orifice.

ⓐ Remove the manifold gasket (note orientation - the larger side goes downwards). **REPLACE THE GASKET AFTER INSTALLING LP ORIFICE.**

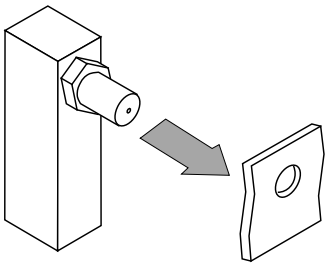

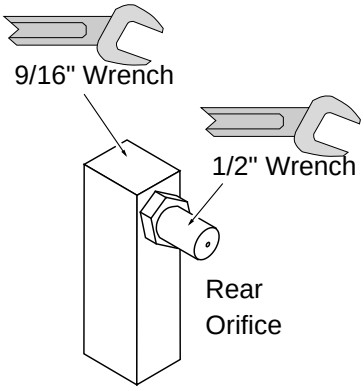

ⓑ Use a 9/16" wrench to secure the manifold while removing the orifice with a 1/2" wrench.

ⓒ Apply thread sealant to the LP orifice prior to installation. Use the chart below to identify the correct orifices.

ⓓ Screw the LP orifice until orifice protrudes 15/16" (23.8mm) indicating full insertion (use wrench to secure manifold when re-attaching orifice).

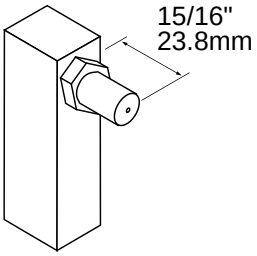

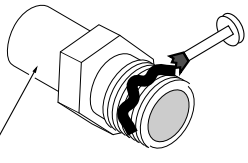

Look here for the orifice identification

	LP	NG
Left Burner	**#55**	#43
Right Burner	**#55**	#43

6. Reinstall the orifice gasket that was removed in step 6.

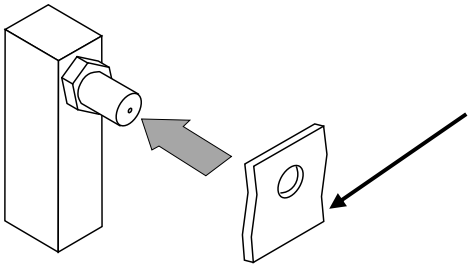

The longer portion of the gasket should be at the bottom.

7. Install the LP pilot orifice following the instructions below.

   (a) Use a 7/16” open-end wrench to remove the pilot hood.

   (b) Remove and discard the Natural Gas (NG) orifice. Place the LP orifice in the pilot assembly then replace the pilot hood, tightening the pilot hood until it is snug (do not over-tighten).

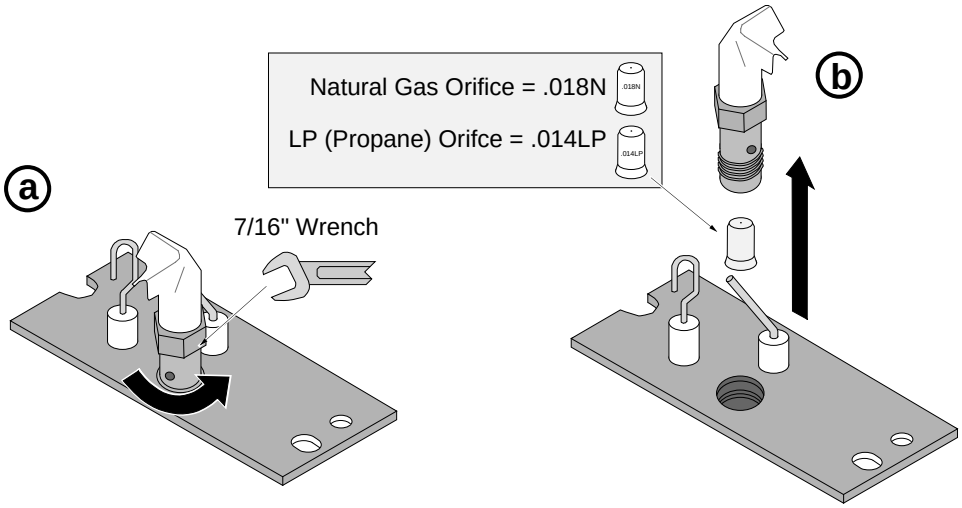

8. Remove the regulator from the front of the gas control valve. There is an knob extension on the regulator knob that will need to be moved to the new regulator. To remove the extension pull toward you. Replace with the propane regulator, using the new gasket and screws included with the regulator. Re-install the knob extension onto the LP regulator knob. The knob extension is directional so you may need to turn it until it lines up properly with the regulator knob and can be pushed into place..
   NOTE: Leak test this area after the heater is installed, gas is connected, and the main burner is lit.

Replace the regulator following the instructions included with the regulator kit. Remove and discard the screws (see "a" below) holding the stock regulator in place (see "b" below). Remove the stock regulator and gasket (see "c" below). Place the LP regulator in place, making sure the pre-fitted gasket (see"c" below) is in place – **make sure it is correctly oriented**. Secure using the screws included with the motor – tighten to 25 Lb-inches. **Leak test this area after installation to verify proper installation.**
There is a label on the base of the regulator knob indicating regulator type (NG or LP). Place the included label on the valve body where it can be easily seen to insure proper identification ("d").

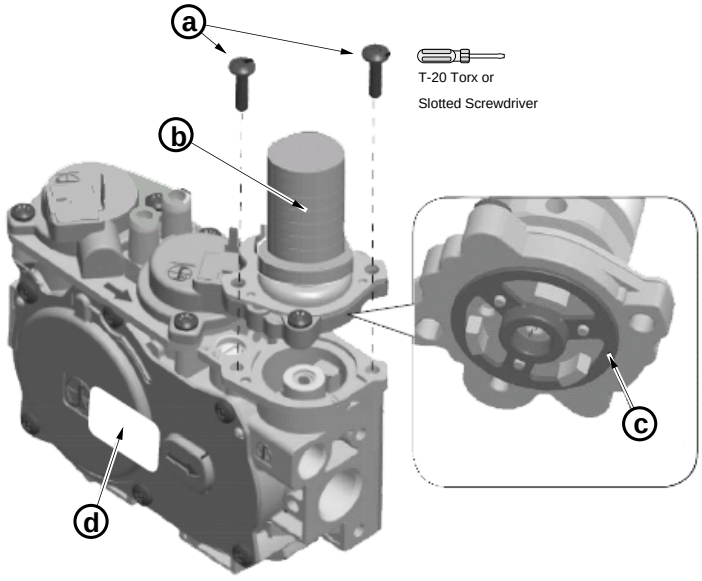

Wall Mount Remote Thermostat installation (optional)

Installation

If Using the Optional Blower, Install it First

The optional blower should be installed before installing the remote.

1 Remove the lower front access panel from the fireplace by reaching in behind it and loosening the two wing nuts and (1) ¼" screw on each side of the panel that hold it in place (see fireplace manual for details.) Lift up and then out on the panel to remove. Lay the panel face down in front of the fireplace.

2 Remove the 4 screws that secure the dashboard to the fireplace and gently lower it to gain access to the back side.

NOTE There should be enough slack in the attached wires to lower the dashboard to the floor. Make sure not to damage any off the attached wires.

3 Remove the two wires from the back of the on/off switch.

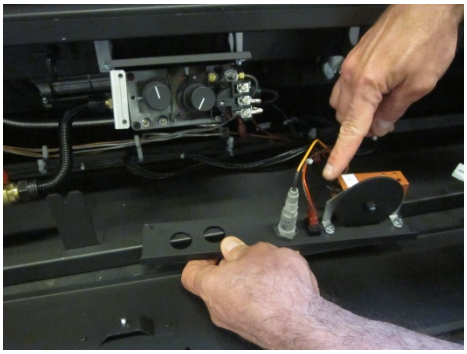

4 Remove the switch from the dashboard by depressing the tabs on the top and the bottom of the switch housing while pressing the back of the switch forward through the hole in the dashboard. Replace the switch with the included switch blank (see pictures below).

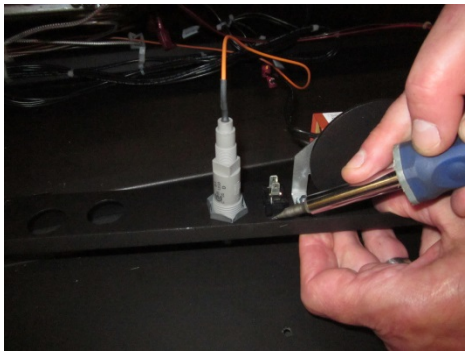

5 Follow the green and white wires to where they attach to the control module. Disconnect the green, plastic connector from the control module by lifting straight up (location is marked X4 on the module). Remove the connector and wires from the unit and discard. Install the switch blank into the empty mounting hole of the switch that was removed.

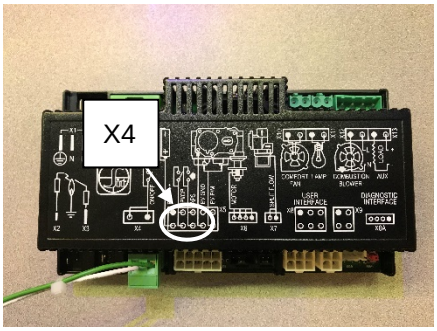

6 Install the system jumper into the same location on the board that you removed the green connector in the previous step.

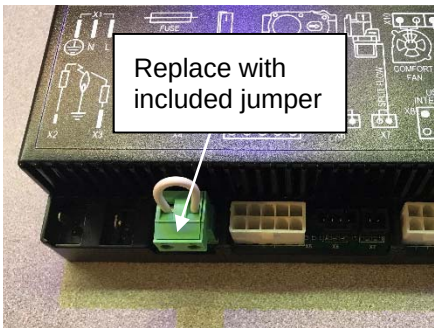

7 Locate the battery holder on the appliance. Disconnect the wires at the plastic Molex connector that connect the battery holder to the appliance wiring harness. Discard the battery holder.

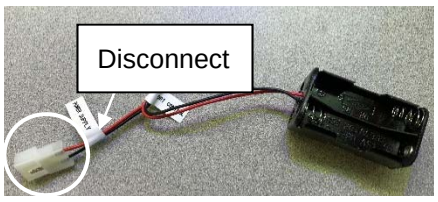

8 Run the end of the included wire harness with (4) wires to the control module. Insert the connector into the “X8 User Interface” location on the module.

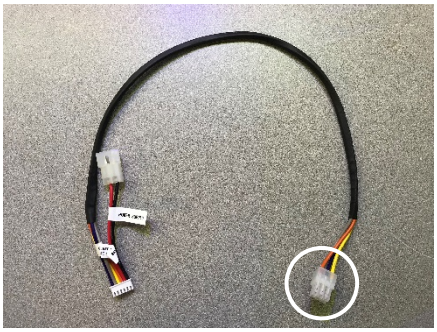

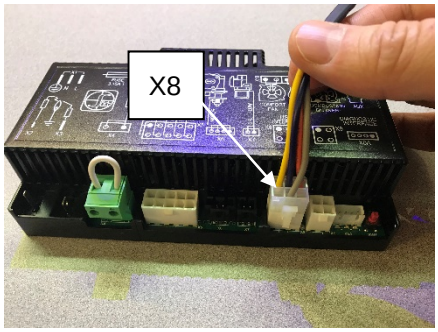

9 Connect the flat, white connector to the back of the included remote battery box. Make sure the two guides are on the top of the connector when inserting it into the battery box.

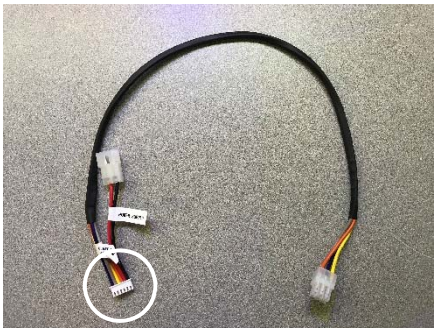

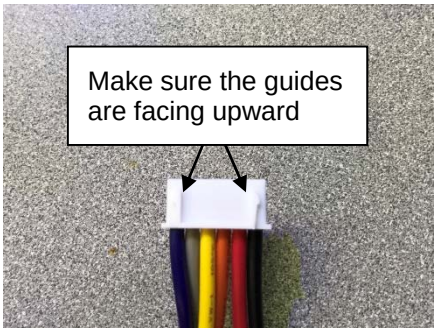

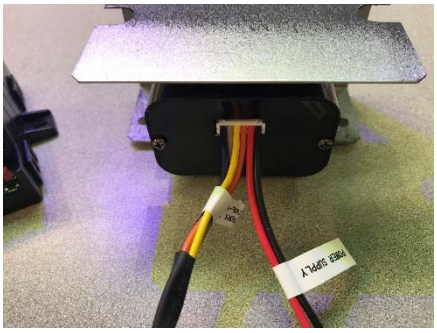

10 Attach the remaining connector with the red and black wires to the wire harness where the battery box was disconnected from in step 4.

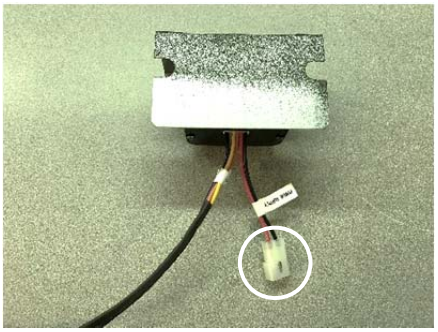

11 On the back side of the panel you removed there be a bracket with two wing nuts. Remove the wing nuts and set aside for reinstallation.

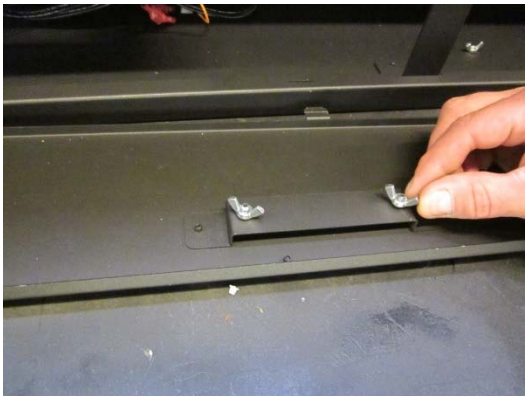

12 Align the two holes on the bottom of the receiver assembly with the studs and secure the assembly to the bracket using the two wing nuts removed in the previous step.

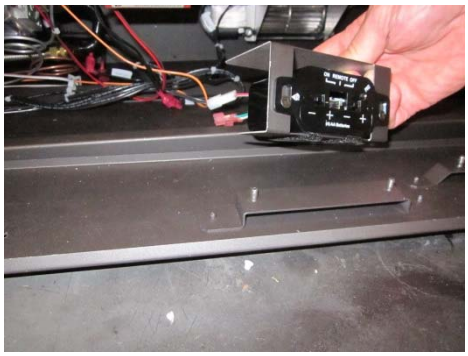

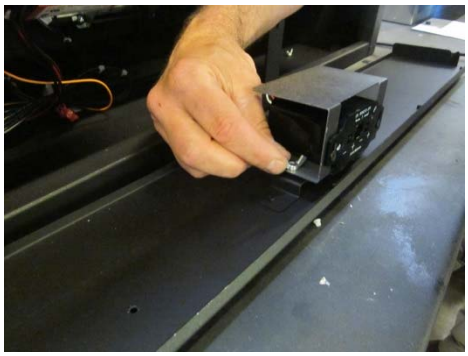

13 Replace the dashboard.

14 Verify wires are not touching the bottom of the firebox. Adjust if necessary.

15 Install the included (4) AA batteries into the battery box.

16 Install the included (3) AAA batteries into the transmitter.

17 See operating instructions for instructions on how to synchronize the transmitter to the control module.

18 Return the appliance to the correct configuration.

Wiring Diagram – GSB2

Caution: Label all wires prior to disconnection when servicing controls. Wiring errors can cause improper and dangerous operation.

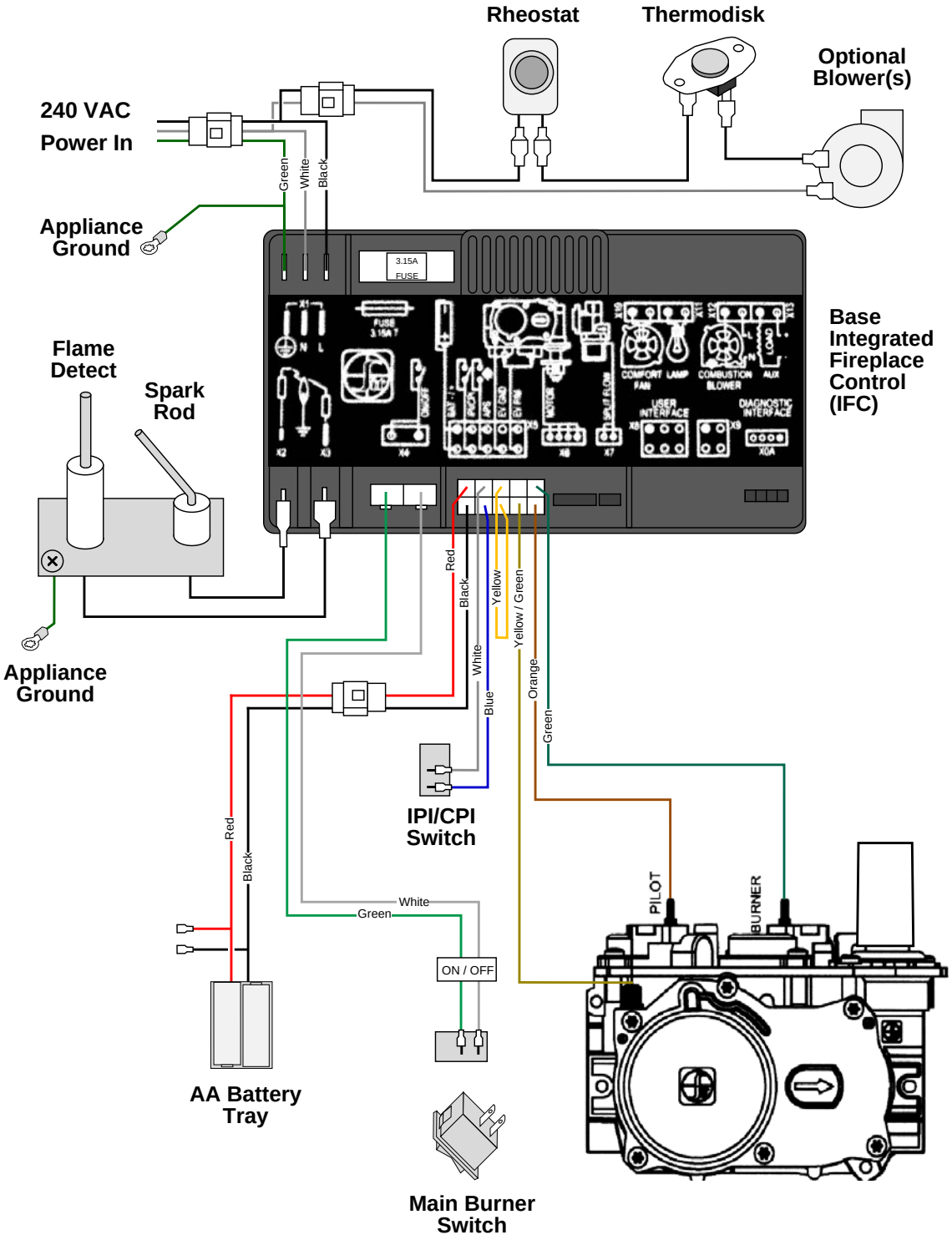

NOTE: IPI/CPI Switch may not be available in Australia

Additional Items Required 7
Air Shutter Adjustment 42
Altitude Considerations 26
Approved Vent 26
Approved Vent Configurations 27
Clearances 8
Corner Installations 20
Crushed Glass Installation 47
Diffuser 28
Dimensions 6
Electrical Connection 24
Fireplace Placement Requirements 8
Fuel 22
Gas Line Connection 22
Gas Line Location 23
Gas Line Requirements 22
Glass Frame Removal and Installation 44
Hearth Requirements 33
Heating Specifications 6
Installation Options 6
Listing Details 2
Location of Controls 43
LP Conversion Instructions 49
Mantel Column Clearances 39
Mantel Requirements 39
Minimum Framing Dimensions 12
Overview 2
Packing List 7
Raised Fireplaces 8
Recommended Installation Procedure 7
Restrictor Position 27
Safety Warnings 4
Standoff Assembly 13
Steps for Finalizing the Installation 41
Termination Requirements 32
Vent Clearances 26
Vent Configuration
- Horizontal Termination with Vertical Rise 31
- Vertical Termination 30

Vent Firestop 26
Vent Installation 26
Vent Requirements 25
Wiring Diagram 58